# SERVICE MANUAL

N140WU / N141WU

notebook

# Notebook Computer

# N140WU / N141WU

# Service Manual

# Notice

The company reserves the right to revise this publication or to change its contents without notice. Information contained herein is for reference only and does not constitute a commitment on the part of the manufacturer or any subsequent vendor. They assume no responsibility or liability for any errors or inaccuracies that may appear in this publication nor are they in anyway responsible for any loss or damage resulting from the use (or misuse) of this publication.

This publication and any accompanying software may not, in whole or in part, be reproduced, translated, transmitted or reduced to any machine readable form without prior consent from the vendor, manufacturer or creators of this publication, except for copies kept by the user for backup purposes.

Brand and product names mentioned in this publication may or may not be copyrights and/or registered trademarks of their respective companies. They are mentioned for identification purposes only and are not intended as an endorsement of that product or its manufacturer.

Version 1.0
April 2018

## Trademarks

**Pentium and Celeron** are trademarks of Intel Corporation.
**Windows**® is a registered trademark of Microsoft Corporation.
Other brand and product names are trademarks and /or registered trademarks of their respective companies.

## About this Manual

This manual is intended for service personnel who have completed sufficient training to undertake the maintenance and inspection of personal computers.

It is organized to allow you to look up basic information for servicing and/or upgrading components of the ***N140WU / N141WU*** series notebook PC.

The following information is included:

Chapter 1, Introduction, provides general information about the location of system elements and their specifications.
Chapter 2, Disassembly, provides step-by-step instructions for disassembling parts and subsystems and how to upgrade elements of the system.

Appendix A, Part Lists
Appendix B, Schematic Diagrams
Appendix C, Updating the FLASH ROM BIOS

## IMPORTANT SAFETY INSTRUCTIONS

Follow basic safety precautions, including those listed below, to reduce the risk of fire, electric shock and injury to persons when using any electrical equipment:

1. Do not use this product near water, for example near a bath tub, wash bowl, kitchen sink or laundry tub, in a wet basement or near a swimming pool.
2. Avoid using a telephone (other than a cordless type) during an electrical storm. There may be a remote risk of electrical shock from lightning.
3. Do not use the telephone to report a gas leak in the vicinity of the leak.
4. Use only the power cord and batteries indicated in this manual. Do not dispose of batteries in a fire. They may explode. Check with local codes for possible special disposal instructions.
5. This product is intended to be supplied by a Listed Power Unit with an AC Input of 100 - 240V, 50 - 60Hz, DC Output of 19V, 2.1A (**40** Watts) minimum AC/DC Adapter.



### FCC Statement

This device complies with Part 15 of the FCC Rules. Operation is subject to the following two conditions:
This device may not cause harmful interference.
This device must accept any interference received, including interference that may cause undesired operation.

## Instructions for Care and Operation

The notebook computer is quite rugged, but it can be damaged. To prevent this, follow these suggestions:

1. **Don't drop it, or expose it to shock.** If the computer falls, the case and the components could be damaged.

| | | |
|---|---|---|
| *Do not expose the computer to any shock or vibration.* 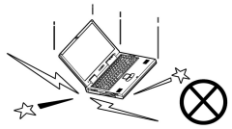 | *Do not place it on an unstable surface.* 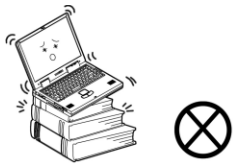 | *Do not place anything heavy on the computer.* 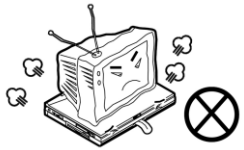 |

2. **Keep it dry, and don't overheat it.** Keep the computer and power supply away from any kind of heating element. This is an electrical appliance. If water or any other liquid gets into it, the computer could be badly damaged.

| | | | |
|---|---|---|---|
| *Do not expose it to excessive heat or direct sunlight.* | *Do not leave it in a place where foreign matter or moisture may affect the system.* | *Don't use or store the computer in a humid environment.* 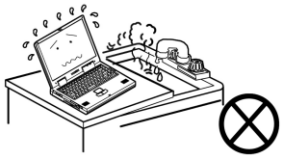 | *Do not place the computer on any surface which will block the vents.* 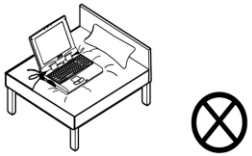 |

3. **Follow the proper working procedures for the computer**. Shut the computer down properly and don't forget to save your work. Remember to periodically save your data as data may be lost if the battery is depleted.

| | | | |
|---|---|---|---|
| *Do not turn off the power until you properly shut down all programs.* 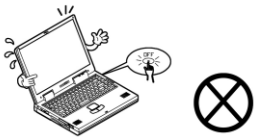 | *Do not turn off any peripheral devices when the computer is on.* 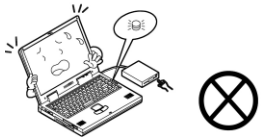 | *Do not disassemble the computer by yourself.* | *Perform routine maintenance on your computer.* |

4. **Avoid interference.** Keep the computer away from high capacity transformers, electric motors, and other strong magnetic fields. These can hinder proper performance and damage your data.
5. **Take care when using peripheral devices**.

| | |
|---|---|
| *Use only approved brands of peripherals.* 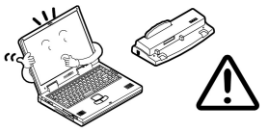 | *Unplug the power cord before attaching peripheral devices.* 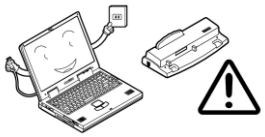 |

## Power Safety

The computer has specific power requirements:

- Only use a power adapter approved for use with this computer.
- Your AC adapter may be designed for international travel but it still requires a steady, uninterrupted power supply. If you are unsure of your local power specifications, consult your service representative or local power company.
- The power adapter may have either a 2-prong or a 3-prong grounded plug. The third prong is an important safety feature; do not defeat its purpose. If you do not have access to a compatible outlet, have a qualified electrician install one.
- When you want to unplug the power cord, be sure to disconnect it by the plug head, not by its wire.
- Make sure the socket and any extension cord(s) you use can support the total current load of all the connected devices.
- Before cleaning the computer, make sure it is disconnected from any external power supplies.

**Power Safety Warning**

Before you undertake any upgrade procedures, make sure that you have turned off the power, and disconnected all peripherals and cables (including telephone lines and power cord). It is advisable to also remove your battery in order to prevent accidentally turning the machine on.

| | | |
|---|---|---|
| *Do not plug in the power cord if you are wet.* | *Do not use the power cord if it is broken.* 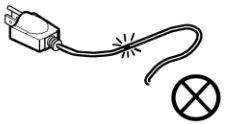 | *Do not place heavy objects on the power cord.* 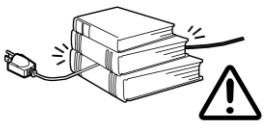 |

## Battery Precautions

- Only use batteries designed for this computer. The wrong battery type may explode, leak or damage the computer.
- Do not continue to use a battery that has been dropped, or that appears damaged (e.g. bent or twisted) in any way. Even if the computer continues to work with a damaged battery in place, it may cause circuit damage, which may possibly result in fire.
- Recharge the batteries using the notebook's system. Incorrect recharging may make the battery explode.
- Do not try to repair a battery pack. Refer any battery pack repair or replacement to your service representative or qualified service personnel.
- Keep children away from, and promptly dispose of a damaged battery. Always dispose of batteries carefully. Batteries may explode or leak if exposed to fire, or improperly handled or discarded.
- Keep the battery away from metal appliances.
- Affix tape to the battery contacts before disposing of the battery.
- Do not touch the battery contacts with your hands or metal objects.

## Battery Guidelines

The following can also apply to any backup batteries you may have.

- If you do not use the battery for an extended period, then remove the battery from the computer for storage.
- Before removing the battery for storage charge it to 60% - 70%.
- Check stored batteries at least every 3 months and charge them to 60% - 70%.

**Battery Disposal**

The product that you have purchased contains a rechargeable battery. The battery is recyclable. At the end of its useful life, under various state and local laws, it may be illegal to dispose of this battery into the municipal waste stream. Check with your local solid waste officials for details in your area for recycling options or proper disposal.

**Caution**

Danger of explosion if battery is incorrectly replaced. Replace only with the same or equivalent type recommended by the manufacturer. Discard used battery according to the manufacturer's instructions.

**Battery Level**

Click the battery icon in the taskbar to see the current battery level and charge status. A battery that drops below a level of 10% will not allow the computer to boot up. Make sure that any battery that drops below 10% is recharged within one week.

## Related Documents

You may also need to consult the following manual for additional information:

User's Manual on CD/DVD

This describes the notebook PC's features and the procedures for operating the computer and its ROM-based setup program. It also describes the installation and operation of the utility programs provided with the notebook PC.

# System Startup

1. Remove all packing materials.
2. Place the computer on a stable surface.
3. Insert the battery and make sure it is locked in position.
4. Securely attach any peripherals you want to use with the computer (e.g. keyboard and mouse) to their ports.
5. **When first setting up the computer use the following procedure** (as to safeguard the computer during shipping, the battery will be locked to not power the system until first connected to the AC/DC adapter and initially set up as below):
   - Attach the AC/DC adapter cord to the DC-In jack on the left of the computer, then plug the AC power cord into an outlet, and connect the AC power cord to the AC/DC adapter and **leave it there for 6 seconds or longer**.
   - Remove the adapter cord from the computer's DC-In jack, and then plug it back in again; the battery will now be unlocked.
6. Use one hand to raise the lid/LCD to a comfortable viewing angle (do not exceed 130 degrees); use the other hand (as illustrated in Figure 1) to support the base of the computer (**Note**: **Never** lift the computer by the lid/LCD).
7. Press the power button to turn the computer "on".

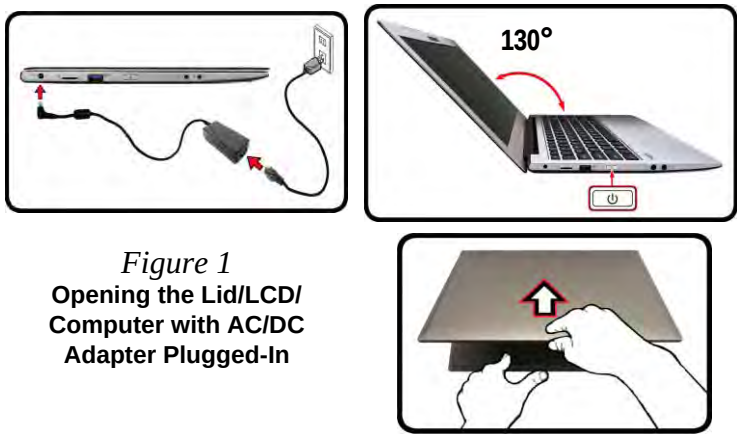


*Figure 1*
**Opening the Lid/LCD/ Computer with AC/DC Adapter Plugged-In**

**Powering the Computer On**

After every disassembly, make sure that the bottom case's screws are all inserted and tightened before turning the computer on.

**Shut Down**

Note that you should always shut your computer down by choosing the **Shut down** command in **Windows** (see below). This will help prevent hard disk or system problems.

Click **Settings** in the **Charms Bar** (use the **Windows Logo Key** + **C** key combination to access the Charms Bar) and choose **Shut down** from the **Power** menu.

**Or**

Choose **Shut down or sign out > Shut down** from the context menu (use the **Windows Logo Key** + **X** key combination to access the context menu).

# Contents


## Introduction .....1-1

Overview .....1-1
Specifications .....1-2
External Locator - Top View with LCD Panel Open .....1-4
External Locator - Front & Right Side Views .....1-5
External Locator - Left Side & Rear View .....1-6
External Locator - Bottom View .....1-7
Mainboard Overview - Top (Key Parts) .....1-8
Mainboard Overview - Bottom (Key Parts) .....1-9
Mainboard Overview - Top (Connectors) .....1-10
Mainboard Overview - Bottom (Connectors) .....1-11

## Disassembly .....2-1

Overview .....2-1
Maintenance Tools .....2-2
Connections .....2-2
Maintenance Precautions .....2-3
Disassembly Steps .....2-4
Removing the Keyboard .....2-5
Removing the Battery .....2-6
Removing the Hard Disk Drive .....2-7
Removing the System Memory (RAM) .....2-9
Removing the Wireless LAN Module .....2-11
Wireless LAN, and Combo Module Cables .....2-12
Removing the 3G Module .....2-13
Removing and Installing the M.2 SSD Module .....2-14
Removing the CCD .....2-17

## Part Lists .....A-1

Part List Illustration Location .....A-2
Top .....A-3
Bottom .....A-4
LCD .....A-5
MB .....A-6

## Schematic Diagrams.....B-1

System Block Diagram .....B-2
Processor 1/10 .....B-3
Processor 2/10 .....B-4
Processor 3/10 .....B-5
Processor 4/10 .....B-6
Processor 5/10 .....B-7
Processor 6/10 .....B-8
Processor 7/10 .....B-9
Processor 8/10 .....B-10
Processor 9/10 .....B-11
Processor 10/10 .....B-12
DDR4 SO-DIMM_0 .....B-13
DDR4 SO-DIMM_1 .....B-14
HDMI .....B-15
Panel .....B-16
RTD2136N .....B-17
PS8338B .....B-18
miniDP .....B-19
AR_TBT .....B-20
AR_Power .....B-21
TPS65982 .....B-22
ASM1543 .....B-23
Type C .....B-24
Card Reader & LAN_RTL8411B .....B-25
Audio Codec .....B-26
KBC ITE IT8587 .....B-27

WLAN/BT, 3G ..... B-28
M Key PCIE SSD ..... B-29
SATA, LED, LID, SW ..... B-30
USB Port / TPM ..... B-31
Conn, CCD, Fan, TP, LED KB ..... B-32
3V, 5V, 3VS, 5VS, 1.8VS CTL ..... B-33
VDD3, VDD5 ..... B-34
VDDQ, VDDQ_VTT, 1.5VS, 1.8VA ..... B-35
1.0V Series ..... B-36
RT3602AE ..... B-37
VCC_In/Out, VCCGT, 2.5V ..... B-38
VCCSA, 2.5V ..... B-39
Charger, DC IN ..... B-40
USB Board ..... B-41
Audio Board ..... B-42
Click Board ..... B-43
LED Board ..... B-44
DC Jack Board ..... B-45

**Updating the FLASH ROM BIOS..... C-1**

Download the BIOS ..... C-1
Unzip the downloaded files to a bootable CD/DVD/ or
USB Flash drive ..... C-1
Set the computer to boot from the external drive ..... C-1
Use the flash tools to update the BIOS ..... C-2
Restart the computer (booting from the HDD) ..... C-2

# Chapter 1: Introduction

## Overview

This manual covers the information you need to service or upgrade the ***N140WU / N141WU*** series notebook computer. Information about operating the computer (e.g. getting started, and the *Setup* utility) is in the *User's Manual*. Information about dri-vers (e.g. VGA & audio) is also found in the *User's Manual*. The manual is shipped with the computer.

Operating systems (e.g. *Window 10*, etc.) have their own manuals as do application softwares (e.g. word processing and database programs). If you have questions about those programs, you should consult those manuals.

The ***N140WU / N141WU*** series notebook is designed to be upgradeable. See ***Disassembly on page 2 - 1*** for a detailed description of the upgrade procedures for each specific component. Please take note of the warning and safety information indicated by the "🔔" symbol.

The balance of this chapter reviews the computer's technical specifications and features.

# Specifications

**Latest Specification Information**

The specifications listed here are correct at the time of sending them to the press. Certain items (particularly processor types/speeds) may be changed, delayed or updated due to the manufacturer's release schedule. Check with your service center for more details.

**CPU**

The CPU is not a user serviceable part. Accessing the CPU in any way may violate your warranty.

## Processor Options

**Intel® Core™ i7 Processor**
**i7-8550U (1.80GHz)**
8MB Smart Cache, **14nm**, DDR4-2400MHz, TDP 15W
**Intel® Core™ i5 Processor**
**i5-8250U (1.60GHz)**
6MB Smart Cache, **14nm**, DDR4-2400MHz, TDP 15W
**Intel® Core™ i3 Processor**
**i3-7100U (2.40GHz)**
3MB Smart Cache, **14nm**, DDR4-2133MHz, TDP 15W

## BIOS

64Mb SPI Flash ROM
AMI BIOS

## Memory

Two 260 Pin SO-DIMM Sockets Supporting **DDR4 2400 MHz** Memory
Memory Expandable up to 32GB
Compatible with 4GB, 8GB or 16GB Modules

(The real memory operating frequency depends on the FSB of the processor.)

## LCD Options

14" (33.78cm), 16:9, QHD+ (3200x1800)/FHD (1920x1080)/HD+ (1600x900)

## Storage

One Changeable 2.5" 7mm (h) SATA HDD/SSD

(**Factory Option**) One M.2 **SATA/PCIe Gen3 x4** Solid State Drive (SSD)
(*Processor Dependent*)

## Video Adapter

**Intel Integrated GPU**
**Intel HD Graphics 620**
Dynamic Frequency
Intel Dynamic Video Memory Technology
Microsoft DirectX®12 Compatible

**Intel UHD Graphics 620**
Dynamic Frequency
Intel Dynamic Video Memory Technology
Microsoft DirectX® 12 Compatible

## Pointing Device

Built-in Touchpad

## Keyboard

Multi Languages A4 size isolated keyboard
(**Factory Option**) Multi Languages A4 size isolated illuminated keyboard

## Audio

High Definition Audio Compliant Interface
2 * Built-In Speakers
Built-In Microphone
(**Factory Option**) Built-In Array Microphone

## Security

Security (Kensington® Type) Lock Slot
BIOS Password
Intel PTT for Systems Without TPM Hardware
(**Factory Option**) TPM 2.0

## M.2 Slots

Slot 1 for **WLAN and Bluetooth** Combo Module
Slot 2 for **SATA/PCIe Gen3 x4 SSD** (*Processor Dependent*)
(**Factory Option**) Slot 3 for **3G/4G** Module

## Card Reader

Embedded Multi-In-1 Card Reader
MMC (MultiMedia Card) / RS MMC
SD (Secure Digital) / Mini SD / SDHC/ SDXC

## Interface

One USB 3.0 (USB 3.1 Gen 1) Type-C Port*
**The maximum amount of current supplied by USB Type-C ports is 500mA (USB 2.0)/1500mA (USB 3.1).*
Or
(**Factory Option**) One USB 3.1 Gen 2/Thunderbolt 3 Combo Port (Type-C)

Two USB 3.0 (USB 3.1 Gen 1) Type-A Ports
One Mini DisplayPort (1.3)
One HDMI-Out Port
One Microphone-In Jack
One Headphone-Out Jack
One RJ-45 LAN Jack
One DC-in Jack

**USB 3.1 Gen 2**

Note that when a single USB device is plugged in to a USB 3.1 Gen 2 port the data transfer speed will be 10Gbps, however when two devices are plugged in to both USB 3.1 Gen 2 ports, this bandwidth will be shared between the ports.

## Communication

Built-In 10/100/1000Mb Base-TX Ethernet LAN
1.0M HD PC Camera Module
Or
(**Factory Option**) Infared Camera Module
(**Factory Option**) **3G** or **4G** M.2 Module

**WLAN/ Bluetooth M.2 Modules:**
(**Factory Option**) Intel® Wireless-AC 8265 Wireless LAN (**802.11ac**) + Bluetooth
(**Factory Option**) Intel® Wireless-AC 3168 Wireless LAN (**802.11ac**) + Bluetooth

## Power

Full Range AC/DC Adapter
AC Input: 100 - 240V, 50 - 60Hz
DC Output: 19V, 2.1A (**40W**)

Embedded Polymer Smart Lithium Ion Battery Pack, 36WH

## Environmental Spec

**Temperature**
Operating: 5°C - 35°C
Non-Operating: -20°C - 60°C
**Relative Humidity**
Operating: 20% - 80%
Non-Operating: 10% - 90%

## Dimensions & Weight

329.8mm (w) * 225mm (d) * 17.8mm (h)
**1.3kg** (Barebone with 36WH Battery)

# External Locator - Top View with LCD Panel Open

*Figure 1*
**Top View**

1. PC Camera
2. *PC Camera LED
   **When the PC camera is in use, the LED will be illuminated in red.*
3. Built-In Microphone
4. LCD
5. Vent
6. Keyboard
7. Touchpad & Buttons

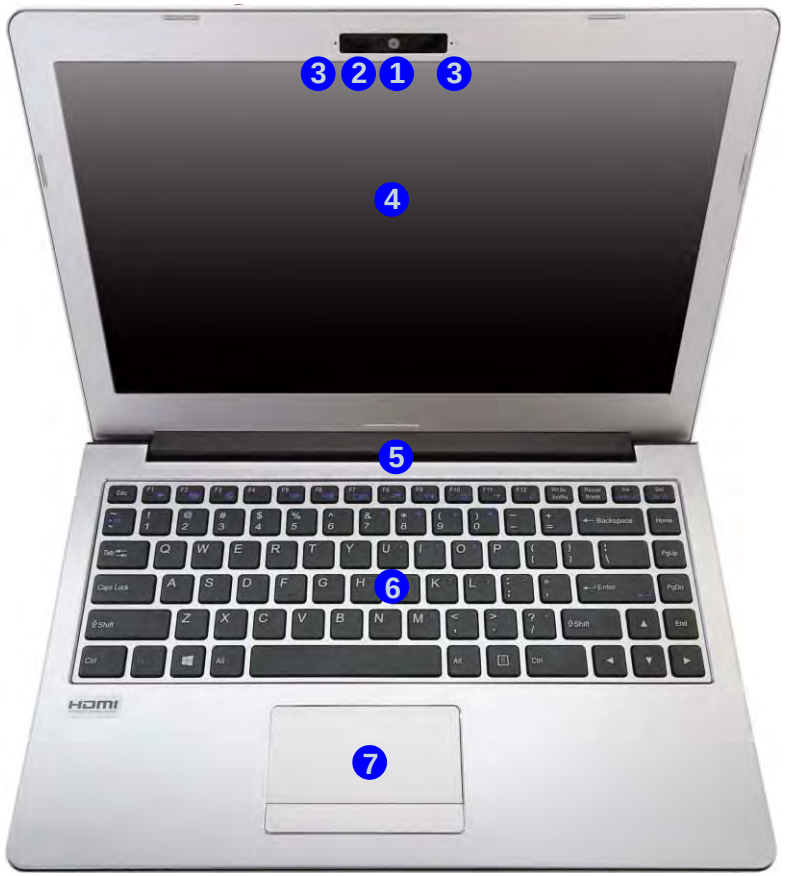

# External Locator - Front & Right Side Views

FRONT VIEW

*Figure 2*
**Front View**

1. LED Indicator

RIGHT SIDE VIEW

*Figure 3*
**Right Side View**

1. USB 3.0 (USB 3.1 Gen 1) Type-C Port
   or
   (**Factory Option**) Thunderbolt 3 Combo Port (Type-C)
2. USB 3.0 (USB 3.1 Gen 1) Type-A Port
3. Mini Display Port
4. HDMI-Out Port
5. Multi-in-1 Card Reader
6. RJ-45 LAN Jack
7. Security Lock Slot

# External Locator - Left Side & Rear View

*Figure 4*
**Left Side View**

1. DC-In Jack
2. USIM Card Reader (for 3G/4G USIM Cards) - Factory Option
3. USB 3.0 (USB 3.1 Gen 1) Type-A Port
4. Power Button
5. Microphone-In Jack
6. Headphone-Out Jack

LEFT SIDE VIEW

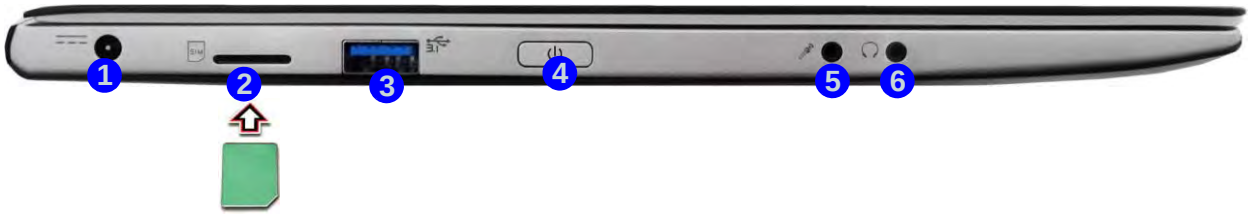


*Figure 5*
**Rear View**

REAR VIEW

# External Locator - Bottom View

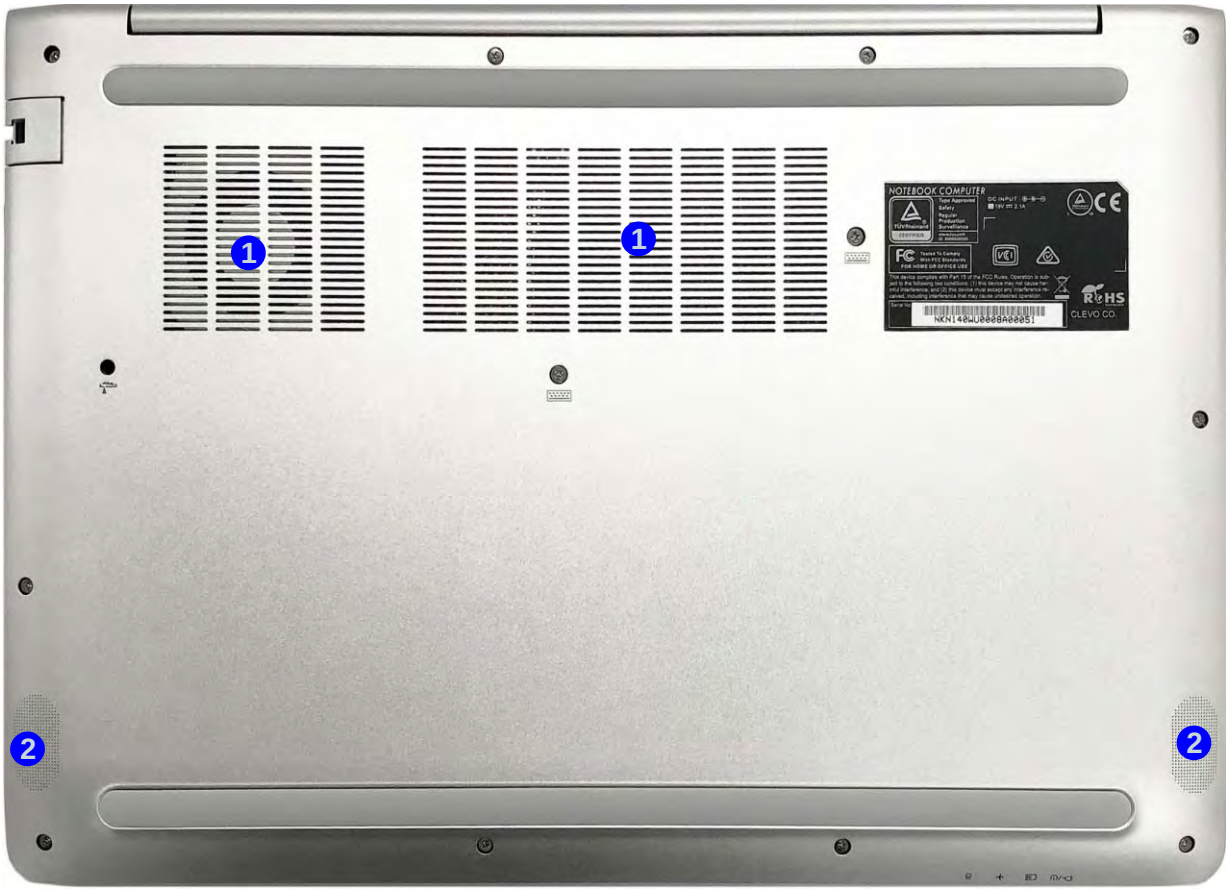


*Figure 6*
**Bottom View**

1. Vent
2. Speakers



**Overheating**

To prevent your computer from overheating, make sure nothing blocks any vent while the computer is in use.

*Figure 7*
**Mainboard Top Key Parts**

# Mainboard Overview - Top (Key Parts)

# Mainboard Overview - Bottom (Key Parts)

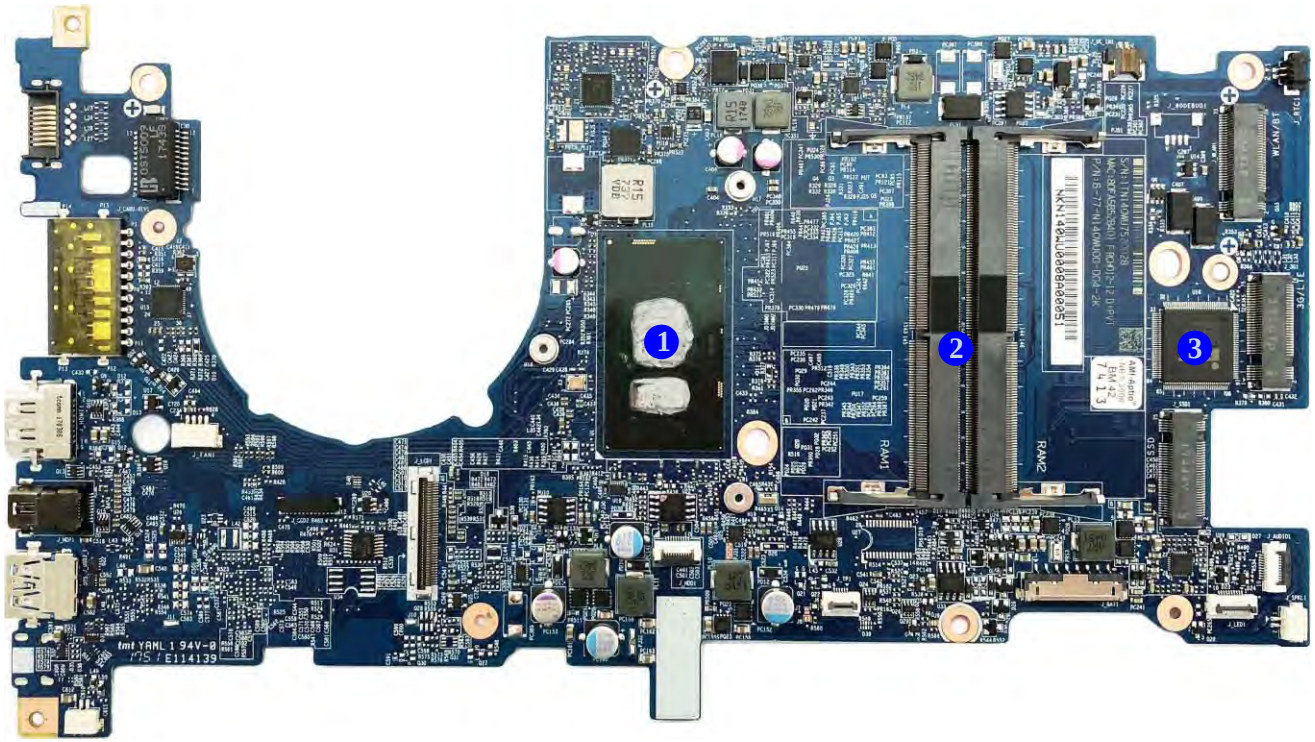


*Figure 8*
**Mainboard Bottom Key Parts**

1. CPU
2. Memory Slots DDR4 SO-DIMM
3. KBC-ITE IT8587

# Mainboard Overview - Top (Connectors)

*Figure 9*
**Mainboard Top Connectors**

1. USB Board Connector
2. Keyboard Cable Connector
3. White LED Keyboard Connector
4. RJ-45 LAN Jack
5. HDMI-Out Port
6. Mini Display Port
7. USB Port 3.0/3.1 Type A Port
8. USB Port 3.0/3.1 Type C Port

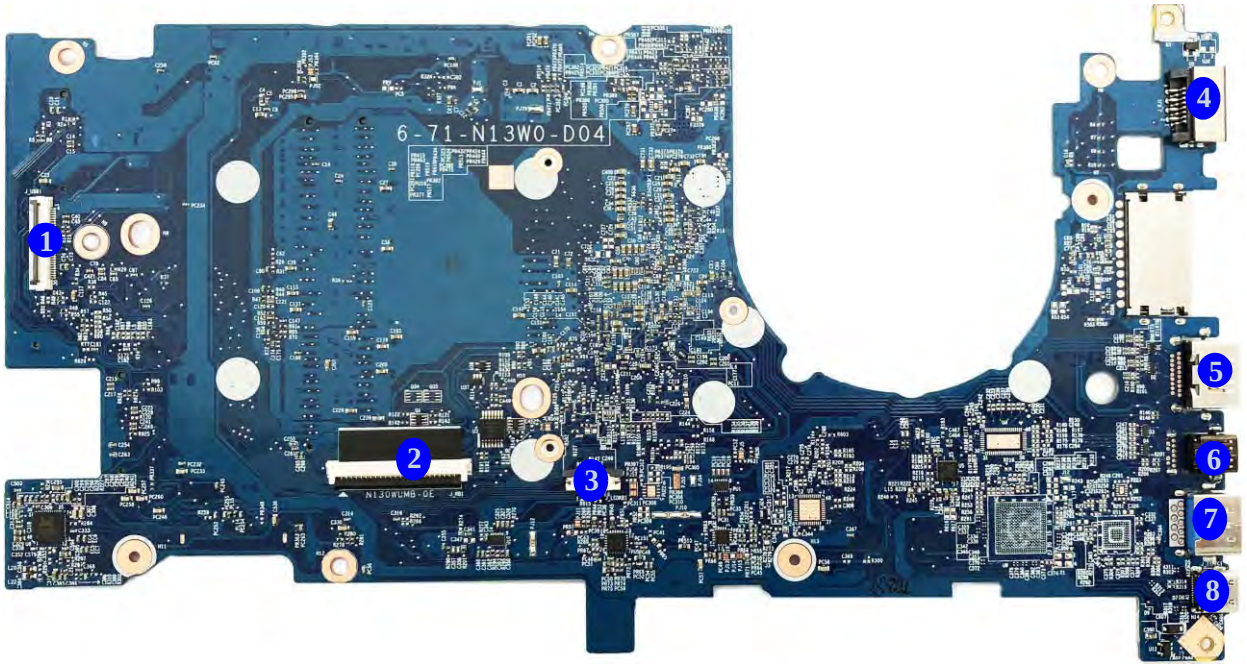

# Mainboard Overview - Bottom (Connectors)

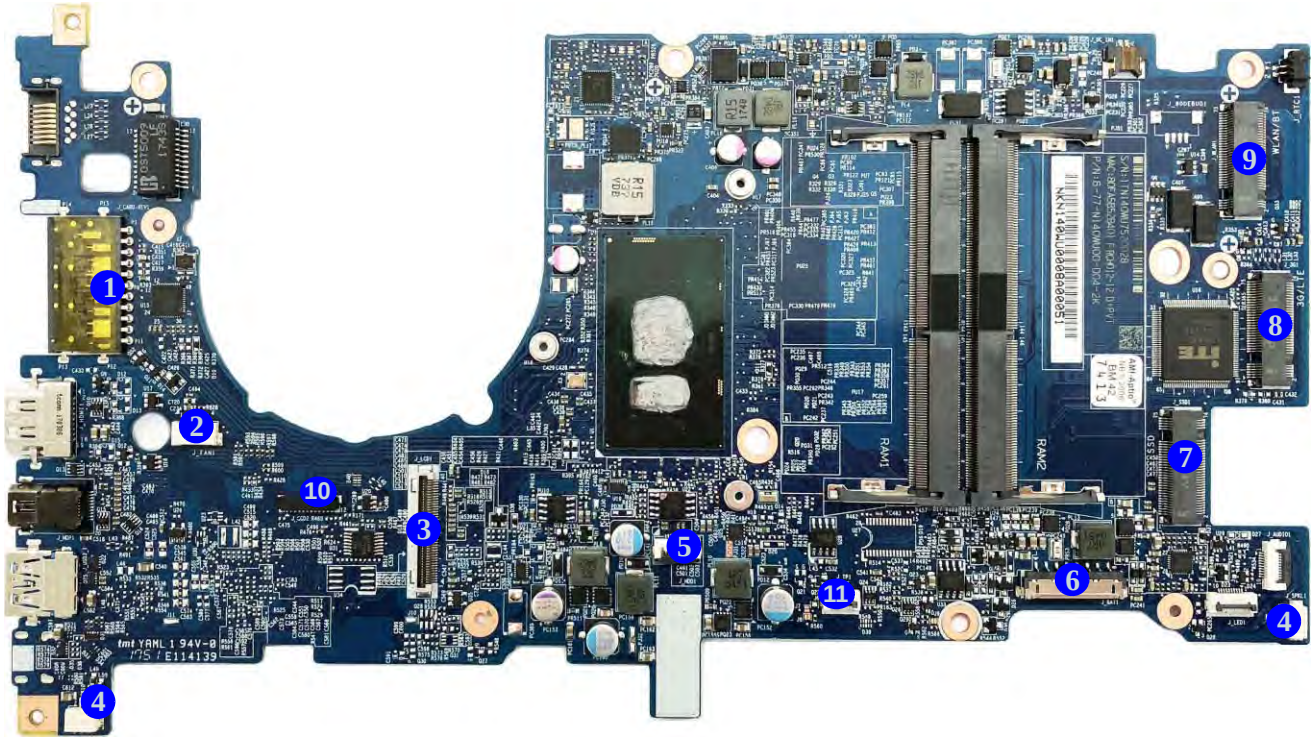


*Figure 10*
**Mainboard Bottom Connectors**

1. Multi-in-1 Card Reader
2. Fan Connector
3. LCD Cable Connector
4. Speaker Connector
5. HDD Connector
6. Battery Connector
7. M.2 Card Connector (SSD)
8. 3G/4G Connector
9. WLAN Connector
10. CCD Connector
11. Touchpad Connector

# Chapter 2: Disassembly

## Overview

This chapter provides step-by-step instructions for disassembling the ***N140WU / N141WU*** series notebook's parts and subsystems. When it comes to reassembly, reverse the procedures (unless otherwise indicated).

We suggest you completely review any procedure before you take the computer apart.

Procedures such as upgrading/replacing the RAM, optical device and hard disk are included in the User's Manual but are repeated here for your convenience.

To make the disassembly process easier each section may have a box in the page margin. Information contained under the figure # will give a synopsis of the sequence of procedures involved in the disassembly procedure. A box with a lists the relevant parts you will have after the disassembly process is complete. **Note**: The parts listed will be for the disassembly procedure listed ONLY, and not any previous disassembly step(s) required. Refer to the part list for the previous disassembly procedure. The amount of screws you should be left with will be listed here also.

A box with a will also provide any possible helpful information. A box with a contains warnings.

An example of these types of boxes are shown in the sidebar.

Information

Warning

**NOTE**: All disassembly procedures assume that the system is turned **OFF**, and disconnected from any power supply (the battery is removed too).

## Maintenance Tools

The following tools are recommended when working on the notebook PC:

- M3 Philips-head screwdriver
- M2.5 Philips-head screwdriver (magnetized)
- M2 Philips-head screwdriver
- Small flat-head screwdriver
- Pair of needle-nose pliers
- Anti-static wrist-strap

## Connections

Connections within the computer are one of four types:

| | |
|---|---|
| Locking collar sockets for ribbon connectors | To release these connectors, use a small flat-head screwdriver to gently pry the locking collar away from its base. When replacing the connection, make sure the connector is oriented in the same way. The pin1 side is usually not indicated. |
| Pressure sockets for multi-wire connectors | To release this connector type, grasp it at its head and gently rock it from side to side as you pull it out. Do not pull on the wires themselves. When replacing the connection, do not try to force it. The socket only fits one way. |
| Pressure sockets for ribbon connectors | To release these connectors, use a small pair of needle-nose pliers to gently lift the connector away from its socket. When replacing the connection, make sure the connector is oriented in the same way. The pin1 side is usually not indicated. |
| Board-to-board or multi-pin sockets | To separate the boards, gently rock them from side to side as you pull them apart. If the connection is very tight, use a small flat-head screwdriver - use just enough force to start. |

## Maintenance Precautions

The following precautions are a reminder. To avoid personal injury or damage to the computer while performing a removal and/or replacement job, take the following precautions:

1. **Don't drop it**. Perform your repairs and/or upgrades on a stable surface. If the computer falls, the case and other components could be damaged.
2. **Don't overheat it**. Note the proximity of any heating elements. Keep the computer out of direct sunlight.
3. **Avoid interference**. Note the proximity of any high capacity transformers, electric motors, and other strong magnetic fields. These can hinder proper performance and damage components and/or data. You should also monitor the position of magnetized tools (i.e. screwdrivers).
4. **Keep it dry**. This is an electrical appliance. If water or any other liquid gets into it, the computer could be badly damaged.
5. **Be careful with power**. Avoid accidental shocks, discharges or explosions.
   - Before removing or servicing any part from the computer, turn the computer off and detach any power supplies.
   - When you want to unplug the power cord or any cable/wire, be sure to disconnect it by the plug head. Do not pull on the wire.
6. **Peripherals** – Turn off and detach any peripherals.
7. **Beware of static discharge**. ICs, such as the CPU and main support chips, are vulnerable to static electricity. Before handling any part in the computer, discharge any static electricity inside the computer. When handling a printed circuit board, do not use gloves or other materials which allow static electricity buildup. We suggest that you use an anti-static wrist strap instead.
8. **Beware of corrosion**. As you perform your job, avoid touching any connector leads. Even the cleanest hands produce oils which can attract corrosive elements.
9. **Keep your work environment clean**. Tobacco smoke, dust or other air-born particulate matter is often attracted to charged surfaces, reducing performance.
10. **Keep track of the components**. When removing or replacing any part, be careful not to leave small parts, such as screws, loose inside the computer.

**Power Safety Warning**

Before you undertake any upgrade procedures, make sure that you have turned off the power, and disconnected all peripherals and cables (including telephone lines and power cord). It is advisable to also remove your battery in order to prevent accidentally turning the machine on.

## Cleaning

Do not apply cleaner directly to the computer, use a soft clean cloth.
Do not use volatile (petroleum distillates) or abrasive cleaners on any part of the computer.
**(For Computer Models Supplied with Light Blue Cleaning Cloth)** Some computer models in this series come supplied with a light blue cleaning cloth. To clean the computer case with this cloth follow the instructions below.

- Power off the computer and peripherals.
- Disconnect the AC/DC adapter from the computer.
- Use a little water to dampen the cloth slightly.
- Clean the computer case with the cloth.
- Dry the computer with a dry cloth, or allow it time to dry before turning on.
- Reconnect the AC/DC adapter and turn the computer on.

# Disassembly Steps

The following table lists the disassembly steps, and on which page to find the related information. **PLEASE PERFORM THE DISASSEMBLY STEPS IN THE ORDER INDICATED.**

### To remove the Keyboard:

1. Remove the keyboard *page 2 - 5*

### To remove the Battery:

1. Remove the keyboard *page 2 - 5*
2. Remove the battery *page 2 - 6*

### To remove the HDD:

1. Remove the keyboard *page 2 - 5*
2. Remove the battery *page 2 - 6*
3. Remove the HDD *page 2 - 7*

### To remove the System Memory:

1. Remove the keyboard *page 2 - 5*
2. Remove the battery *page 2 - 6*
3. Remove the system memory *page 2 - 9*

### To remove the Wireless LAN Module:

1. Remove the keyboard *page 2 - 5*
2. Remove the battery *page 2 - 6*
3. Remove the WLAN *page 2 - 11*

### To remove the 3G Module:

1. Remove the keyboard *page 2 - 5*
2. Remove the battery *page 2 - 6*
3. Remove the 3G *page 2 - 13*

### To remove and install the M.2 SSD Module:

1. Remove the keyboard *page 2 - 5*
2. Remove the battery *page 2 - 6*
3. Remove the SSD-1 module *page 2 - 14*
4. Remove the SSD-2 module *page 2 - 15*
5. Install the SSD-2 module *page 2 - 15*

### To remove the CCD Module:

1. Remove the keyboard *page 2 - 5*
2. Remove the battery *page 2 - 6*
3. Remove the CCD module *page 2 - 17*

# Removing the Keyboard

1. Turn **off** the computer, turn it over.
2. Remove screws 1 - 2 from the bottom case (***Figure 1a***).
3. Open it up with the LCD on a flat surface before pressing at point 3 to release the keyboard module (use the specific eject stick 4 to do this) while releasing the keyboard in the direction of the arrow 5 as shown (***Figure 1b***).
4. Carefully lift the keyboard 6 up, being careful not to bend the keyboard ribbon cable 7. Disconnect the keyboard ribbon cable from the locking collar socket 8 (***Figure 1c***).
5. Carefully lift up the keyboard 6 off the computer (***Figure 1d***).
6. Reverse the process to install the keyboard (be careful not to bend the keyboard ribbon cable).

*Figure 1*
**Keyboard Removal**

a.
b. Release the keyboard by pressing at point 3.
c. Disconnect the keyboard ribbon cable from the locking collar socket.
d. Remove the keyboard.

a.

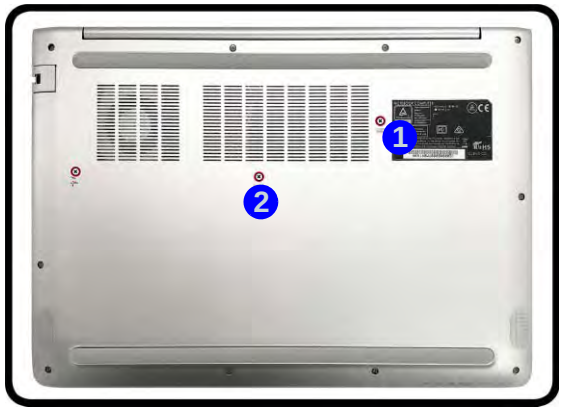


b.

c.

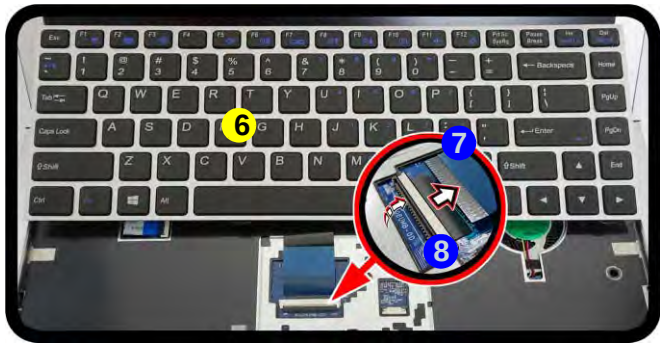


c.

4. Eject Stick
6. Keyboard

*Figure 2*
**Battery Removal**

a. Remove the screws.
b. Remove the screws.
c. Remove the bottom case and locate the battery.
d. Disconnect the cable and remove the screws.
e. Lift the battery off the computer.

# Removing the Battery

1. Turn **off** the computer, turn it over to remove the keyboard (***page 2 - 5***).
2. Remove screws 1 - 3 (***Figure 2a***).
3. Remove screws 4 - 13 on the bottom case (***Figure 2b***).
4. Remove the bottom case 14 up. The battery will be visible at point 15 on the computer (***Figure 2b***).
5. Carefully disconnect the cable 16, then remove screws 17 - 21 (***Figure 2c***).
6. Lift the battery 22 off the computer (***Figure 2d***).
7. Reverse the process to install a new battery (do not forget to replace all the screws and bottom cover).

**Powering the Computer On**

After every disassembly, make sure that the bottom case's screws are all inserted and tightened before turning the computer on.

14. Bottom Case
22. Battery

- 18 Screws

a.

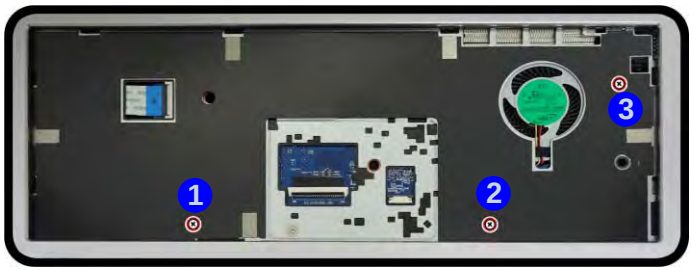


c.

b.

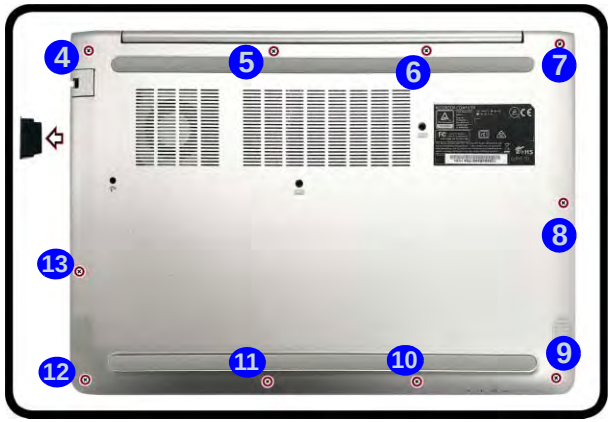


d.

e.

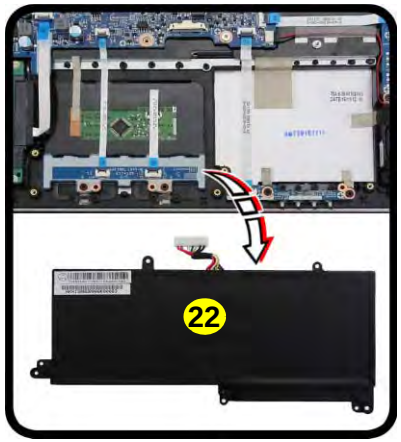

# Removing the Hard Disk Drive

The hard disk drive can be taken out to accommodate other 2.5" serial (SATA) hard disk drives with a height of 7.0mm (h). Follow your operating system's installation instructions, and install all necessary drivers and utilities (as outlined in **Chapter 4 of the User's Manual**) when setting up a new hard disk.

## Hard Disk Upgrade Process

1. Turn **off** the computer, turn it over to remove the keyboard (***page 2 - 5***) and battery (***page 2 - 6***).
2. The hard disk drive will be visible at point 1 on the mainboard (***Figure 3a***).
3. Disconnect the cable 2 from the HDD assembly (***Figure 3b***).

**a.**

**b.**

*Figure 3*
**HDD Assembly Removal**

a. Locate the HDD assembly.
b. Remove the screw.

**HDD System Warning**

New HDD's are blank. Before you begin make sure:

You have backed up any data you want to keep from your old HDD.

You have all the CD-ROMs and FDDs required to install your operating system and programs.

If you have access to the internet, download the latest application and hardware driver updates for the operating system you plan to install. Copy these to a removable medium.

1. HDD Assembly

- 1 Screw

*Figure 4*
**HDD Assembly Removal (cont'd.)**

c. Slightly lift to pull the HDD assembly in the direction of the arrow.
d. Lift the HDD assembly out of the bay.

4. Slightly lift to pull the hard disk assembly in the direction of arrow 3 (***Figure 4c***).
5. Lift the hard disk 4 out of the bay 5 (***Figure 4d***).
6. Reverse the process to install a new hard disk (do not forget to replace all the screws and bottom cover).

**c.**

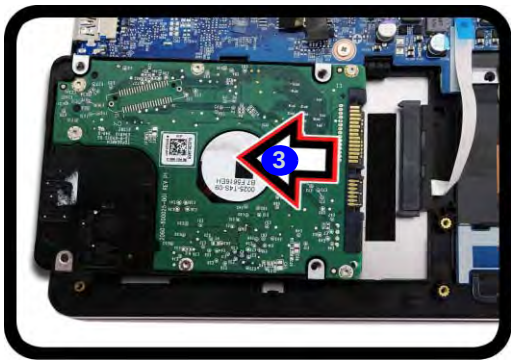


**d.**

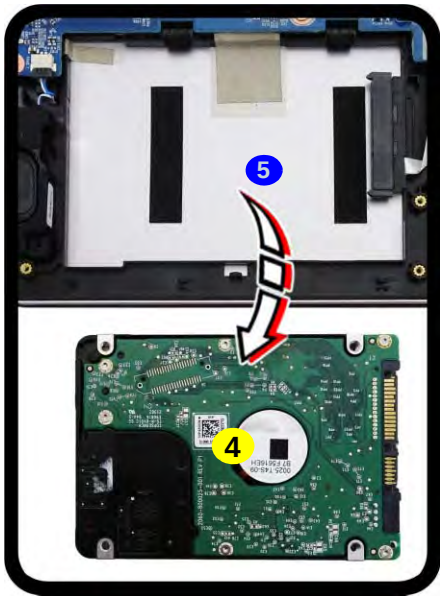


4. HDD

# Removing the System Memory (RAM)

The computer has two memory sockets for 260 pin Small Outline Dual In-line Memory Modules (SO-DIMM) supporting DDR4 2133MHz. The main memory can be expanded up to 32GB. The total memory size is automatically detected by the POST routine once you turn on your computer.

## Memory Upgrade Process

1. Turn **off** the computer, turn it over to remove the keyboard (***page 2 - 5***) and battery (***page 2 - 6***).
2. The RAM modules will be visible at point 1 on the mainboard (***Figure 5b***).
3. Gently pull the two release latches (2 & 3) on the sides of the memory socket in the direction indicated by the arrows (***Figure 5b***).
4. The RAM module 4 will pop-up (***Figure 5c***), and you can then remove it.

*Figure 5*
**RAM Module Removal**

a. The RAM modules will be visible at point 1 on the mainboard.
b. Pull the release latches.
c. Remove the module.

**a.**

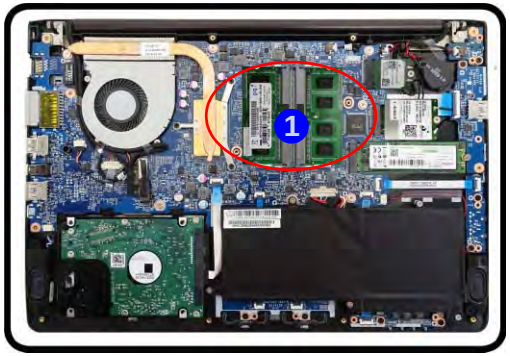


**b.**

**c.**

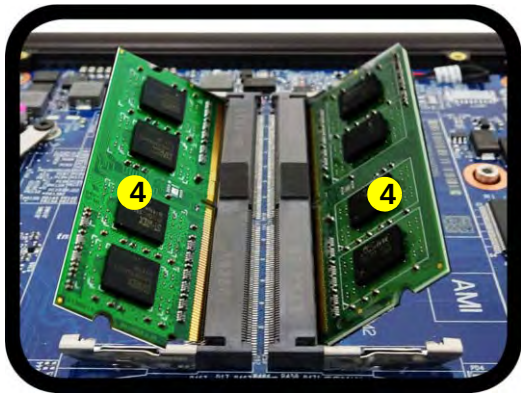


**Contact Warning**

Be careful not to touch the metal pins on the module's connecting edge. Even the cleanest hands have oils which can attract particles, and degrade the module's performance.

**Single Memory Module Installation**

If your computer has a single memory module, then insert the module into the **Channel 0 (JDIMM1 / RAM1)** socket.

4. RAM Module

5. Pull the latches to release the second module if necessary.
6. Insert a new module holding it at about a 30° angle and fit the connectors firmly into the memory slot.
7. The module will only fit one way as defined by its pin alignment. Make sure the module is seated as far into the slot as it will go. DO NOT FORCE IT; it should fit without much pressure.
8. Press the module in and down towards the mainboard until the slot levers click into place to secure the module.
9. Replace the bottom case and the screws (see ***page 2 - 6***).
10. Restart the computer to allow the BIOS to register the new memory configuration as it starts up.

# Removing the Wireless LAN Module

1. Turn **off** the computer, turn it over to remove the keyboard (***page 2 - 5***) and battery (***page 2 - 6***).
2. The Wireless LAN module will be visible at point 1 on the mainboard (***Figure 6a***).
3. Carefully disconnect the cables 2 & 3, and then remove the screw 4 (***Figure 6b***)
4. The Wireless LAN module 5 (***Figure 6c***) will pop-up, and you can remove it from the computer.
5. Reverse the process to install a new module (do not forget to replace all the screws and bottom cover).

a.

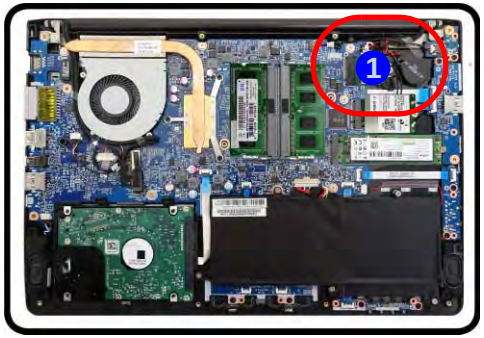


b.

c.

*Figure 6*
**Wireless LAN Module Removal**

a. Locate the WLAN.
b. Disconnect the cable and remove the screw.
c. The WLAN module will pop up and lift it out of the computer.

Note: Make sure you reconnect the antenna cable to the “1 + 2” socket (***Figure 6b***).

5.Wireless LAN Module

- 1 Screw

# Wireless LAN, and Combo Module Cables

Note that the cables for connecting to the antennae on WLAN, WLAN & Bluetooth Combo, 3G and LTE modules are not labelled. The cables/covers (each cable will have either a black or transparent cable cover) are color coded for identification as outlined in the table below.

| Module Type | Antenna Type | Cable Color | Cable Cover Type |
|---|---|---|---|
| WLAN/WLAN & Bluetooth Combo | WM 1 | Black | Transparent |
| | WM 2 | Black | White |
| LTE Broadband | LTE 1 | Black | Black |
| | LTE 2 | Black | Blue |

Cable 1 is usually connected to antenna 1 (Main) on the module, and cable 2 to antenna 2 (Aux).

# Removing the 3G Module

## 3G Module Removal Procedure

1. Turn **off** the computer, turn it over to remove the keyboard (***page 2 - 5***) and battery (***page 2 - 6***).
2. Locate the module, it is visible at point 1 (***Figure 7a***).
3. Carefully disconnect the cables 2 & 3, and then remove the screw 4 from the module (***Figure 7b***).
4. The module 5 will pop-up (***Figure 7c***).
5. Lift the module 5 up and off the computer (***Figure 7d***).
6. Reverse the process to install a new module (do not forget to replace all the screws and bottom cover).

*Figure 7*
**3G Module Removal**

a. Locate the module.
b. Disconnect the cables and remove the screw.
c. The module will pop-up.
d. Lift the module up off the socket.

a.

b.

c.

d.

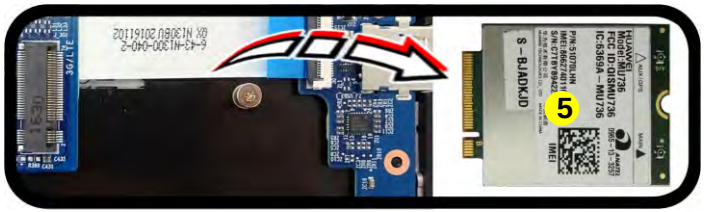


5. 3G Module

- 1 Screw

*Figure 8*
**M.2 SSD-1 Module Removal**

a. Locate the M.2 SSD.
b. Remove the screw.
c. The M.2 SSD module will pop up.

# Removing and Installing the M.2 SSD Module

## M.2 SSD-1 Removal Procedure

1. Turn **off** the computer, turn it over to remove the keyboard (***page 2 - 5***) and battery (***page 2 - 6***).
2. The M.2 SSD module will be visible at point 1 on the mainboard (***Figure 8a***).
3. Remove the screw 2 (***Figure 8b***)
4. The M.2 SSD module 3 (***Figure 8c***) will pop-up, and you can remove it from the computer.

a.

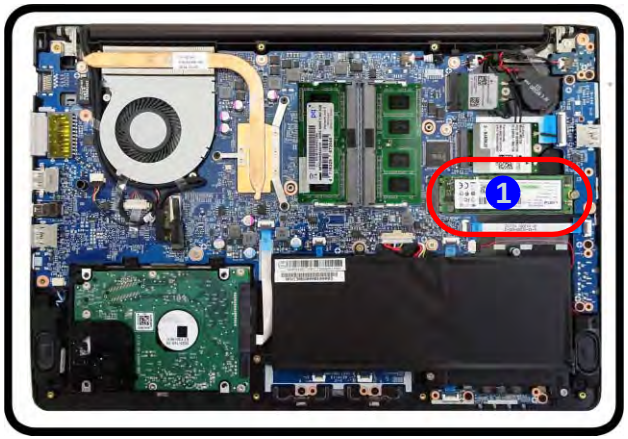


c.

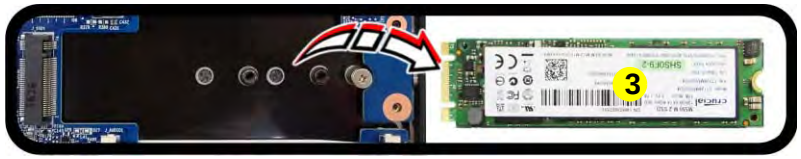


b.

3.M2 SATA Module

- 1 Screw

## M.2 SSD-2 Removal Procedure

1. Turn **off** the computer, turn it over to remove the keyboard (***page 2 - 5***) and battery (***page 2 - 6***).
2. The M.2 SSD module will be visible at point 1 on the mainboard (***Figure 9a***).
3. Remove the screw 2 (***Figure 9b***)
4. The M.2 SSD module 3 (***Figure 9c***) will pop-up, and you can remove it from the computer.

a.

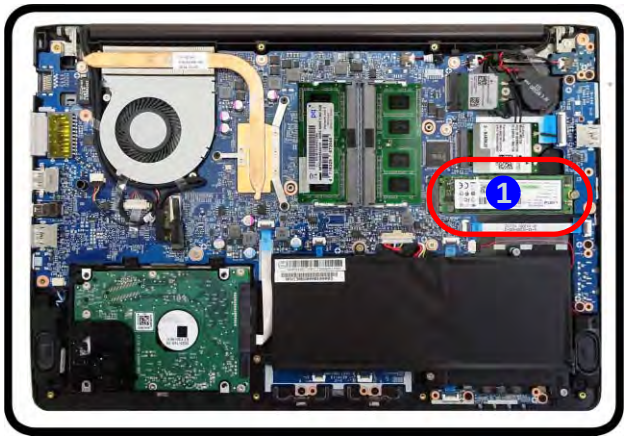


b.

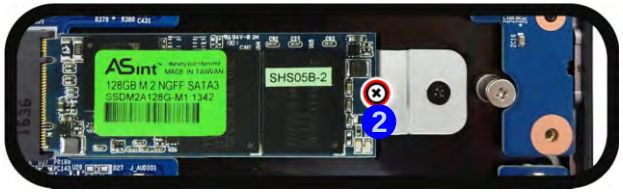


c.

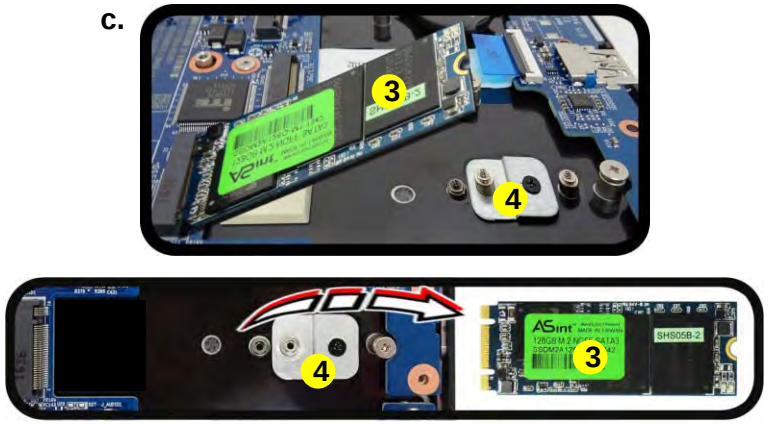


*Figure 9*
**M.2 SSD-2 Module Removal**

a. Locate the M.2 SSD.
b. Remove the screw.
c. The M.2 SSD module will pop up.

3.M2 SATA Module
4.Module Bracket

- 1 Screw

*Figure 10*
**M.2 SSD Module Installation**

a. Place the thermal pad.
b. Insert the module.
c. Tighten the screw.

## M.2 SSD Installation Procedure

1. Place the thermal pad (1) on the module as shown (***Figure 10a***).
2. Insert the module (2) in the computer (***Figure 10b***).
3. Tighten the screw (3) to secure the module in place (***Figure 10c***)

**a.**

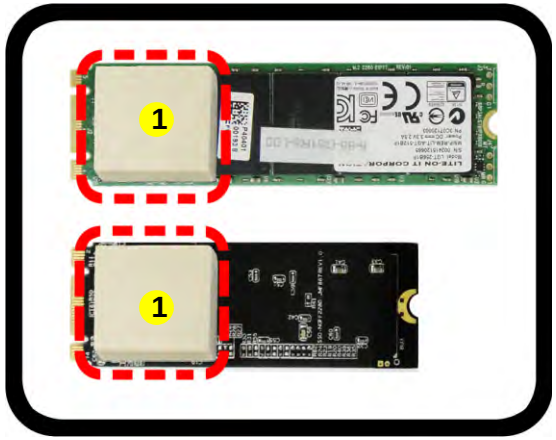


**b.**

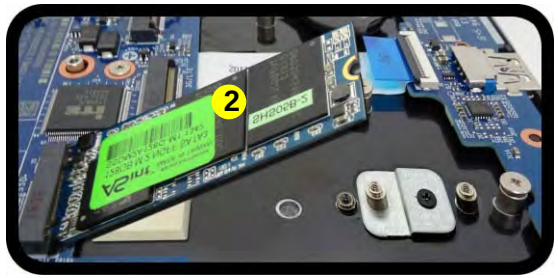


**c.**

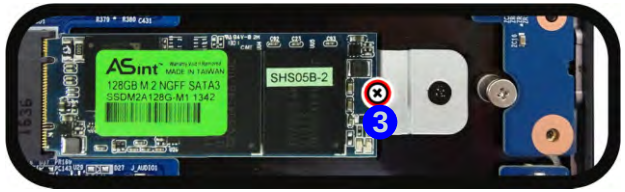


**Thermal Pad**

Make sure to place the thermal pad's adhesive side down on the module's surface as illustrated. Insert the module with the thermal pad facing the mainboard.

1.Thermal Pad
2.M2 SATA Module

- 1 Screw

# Removing the CCD

1. Turn **off** the computer, turn it over to remove the keyboard (***page 2 - 5***) and battery (***page 2 - 6***).
2. Lift up the inner frame and run your fingers around the inner frame of the LCD panel at the points as indicated by the arrows 1 - 4 (***Figure 11a***).
3. Lay the computer down on a flat surface with the top case up forming a 130 degree angle. Carefully lift and remove the LCD front cover 5 upwards (***Figure 11b***).

**a.**

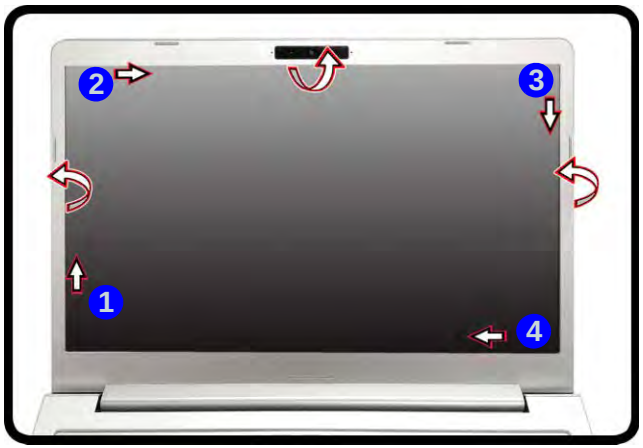


**b.**

*Figure 11*
**CCD Removal**

a. Run your fingers around the inner frame of the LCD panel at the points indicated by the arrows.
b. Lay the computer down on a flat surface with the top case up forming a 130 degree angle. Lift the LCD front panel upwards.

5. LCD Front Cover

*Figure 12*
**CCD Removal (cont'd.)**

c. Disconnect the cable.
d. Remove the CCD module.

4. Disconnect the cable 6 (***Figure 12c***).
5. Remove the CCD module 7 (***Figure 12d***).
6. Reverse the process to install a new CCD module.

**c.**

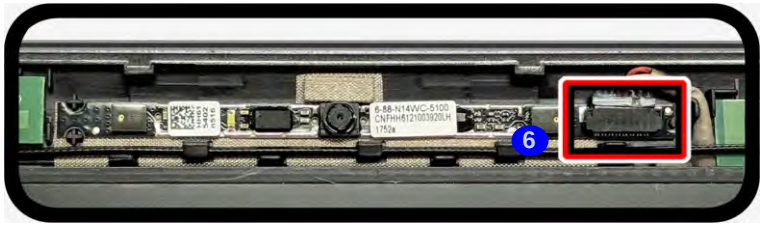


**d.**

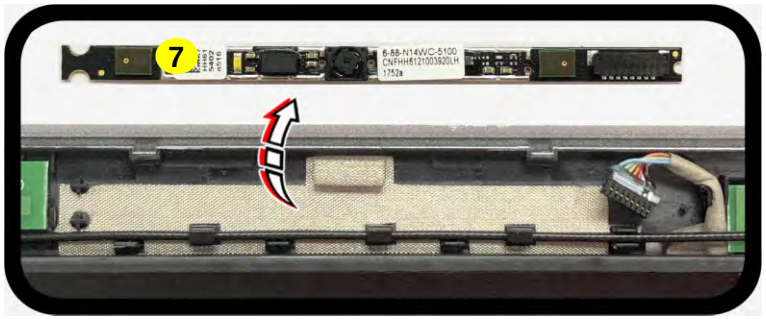


7. CCD Module

# Appendix A:Part Lists

This appendix breaks down the ***N140WU / N141WU*** series notebook's construction into a series of illustrations. The component part numbers are indicated in the tables opposite the drawings.

**Note:** This section indicates the *manufacturer's* part numbers. Your organization may use a different system, so be sure to cross-check any relevant documentation.

**Note:** Some assemblies may have parts in common (especially screws). However, the part lists DO NOT indicate the total number of duplicated parts used.

**Note:** Be sure to check any update notices. The parts shown in these illustrations are appropriate for the system at the time of publication. Over the product life, some parts may be improved or re-configured, resulting in *new* part numbers.

# Part List Illustration Location

The following table indicates where to find the appropriate part list illustration.

*Table A - 1*
**Part List Illustration Location**

| Part | |
|---|---|
| Top | *page A - 3* |
| Bottom | *page A - 4* |
| LCD | *page A - 5* |
| MB | *page A - 6* |

# Top

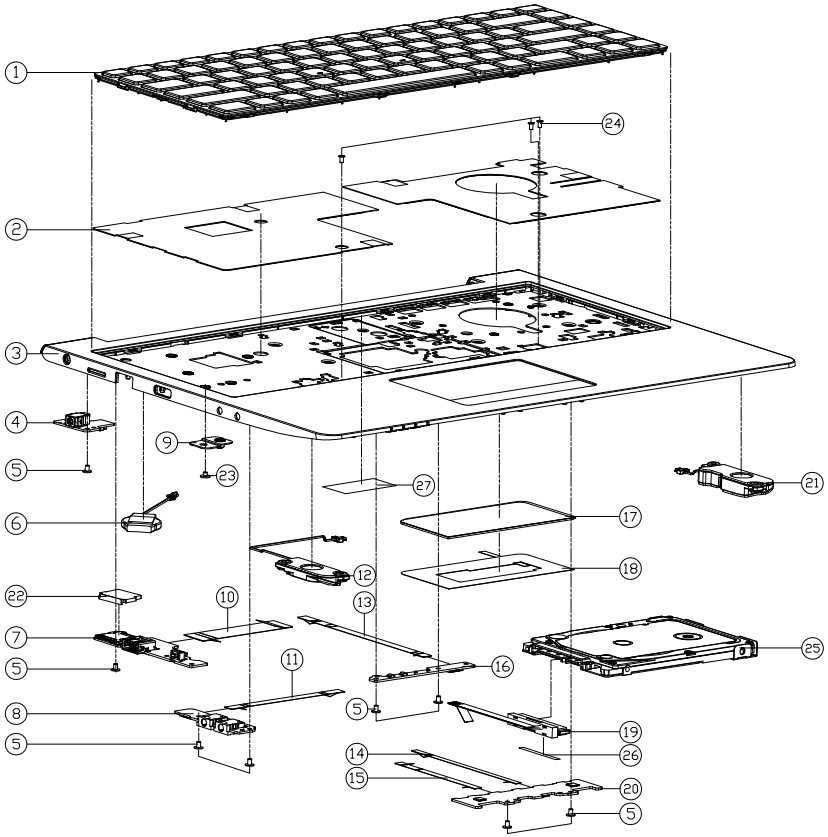

| ITEM | PART NAME | PART NO | REMARK |
|---|---|---|---|
| 1 | WHITE BL KB USA NP-SSC230S,K836 MC8RU BLACK ISOLATION WITH WIND KEY + K/B FRAME | 6-80-N13B0-011-1 | |
| 1 | WIN10 K/B USA(BLACK)& FRAME(US) MODULE FOR N130BU | 6-79-N130BU0K-010-W | |
| 2 | NON BACK LIGHT KB MYLAR (PET) N130BU | 6-40-N1302-012 | FOR W/O BL KB |
| 3 | TOP CASE MODULE N131BU | 6-39-N1312-012 | |
| 4 | DC JACK BOARD V2.0A N130BU | 6-77-N130C-D02A | |
| 5 | SCREW M2*3L KI BZ ICT NY (DD=Ø4.5,DT=0.4) | 6-35-B6120-3RD | |
| 6 | BAT. 20MM 3V 220MAH W/CABLE 55MM BCR2032H5.5VM10B (SHINEND) | 6-23-22015-TE0 | |
| 7 | USB BOARD V2.0 (W/LTE) N130WU | 6-77-N13W3-D02 | |
| 7 | USB BOARD V2.0 (W/O LTE) N130WU | 6-77-N13W3-D02-1 | |
| 8 | AUDIO BOARD V2.0A N130BU | 6-77-N1308-D02A | |
| 9 | SSD BRACKET SGCC N130BU | 6-33-N130S-011 | ONLY FOR M.2 (2260/2242) SSD |
| 10 | FFC CABLE FOR 3G TO MB L=60MM / 60V / 30PIN (GD) N130BU | 6-43-N1300-041-2 | |
| 11 | FFC CABLE FOR AUDIO TO MB L=76MM / 60V / 10PIN (GD) N130BU | 6-43-N1300-030-2 | |
| 12 | SPK+CABLE L 42.45*15.85 95MM 2W 4? SPONGE N130BU | 6-23-5N130-0L2 | |
| 13 | FFC CABLE FOR LED TO MB L=102.5MM / 60V / 10PIN (GD) N130BU | 6-43-N1300-021-2 | |
| 14 | FFC CABLE FOR CLICK TO MB L=85MM 60V 6PIN (GD) N130BU | 6-43-N1300-010-2 | |
| 15 | FFC CABLE FOR CLICK TO TP L=65MM / 60V / 8PIN) (GD) N130BU | 6-43-N1302-010-2 | |
| 16 | LED BOARD V1.0 N130WU | 6-77-N13W4-D01 | |
| 17 | TOUCH PAD SYNAPTICS 84*42 TM-03175-002 N240BU | 6-49-N24J3-010 | |
| 18 | TP MYLAR FOR ISOLATION N130BU | 6-40-N1302-020 | |
| 19 | HDD CONN.5DN07-100+PCB+W/CABLE+DATE CODE (FFC CABLE 73MM) N130BU | 6-23-FN130-011 | |
| 20 | CLICK BOARD V3.0 N130WU | 6-77-N13W2-D03 | |
| 21 | SPK+CABLE R 53.5*16.9 15.5MM 2W 4? SPONGE N130BU | 6-23-5N130-0R2 | |
| 22 | SIM HOLE RUBBER N130BU | 6-47-N1302-0C1 | |
| 23 | SCREW M2*2L KI NI ICT NY (DD=Ø5 ,T=0.5) | 6-35-B1120-2R0 | |
| 24 | .SCREW M2*4L KI NI ICT NY (DD=Ø4.5,DT=0.4) | 6-35-B1120-4RE | |
| 25 | W/O HDD ASS'Y N140WU | 6-79-N140WU0J-010 | |
| 26 | TAPE MYLAR (B),MYLAR M550J | 6-40-M55J2-020 | |
| 27 | TOP CASE THERMAL MYLAR N140WU | 6-40-N14W2-010 | |

*Figure A - 1*
**Top**

# Bottom

*Figure A - 2*
**Bottom**

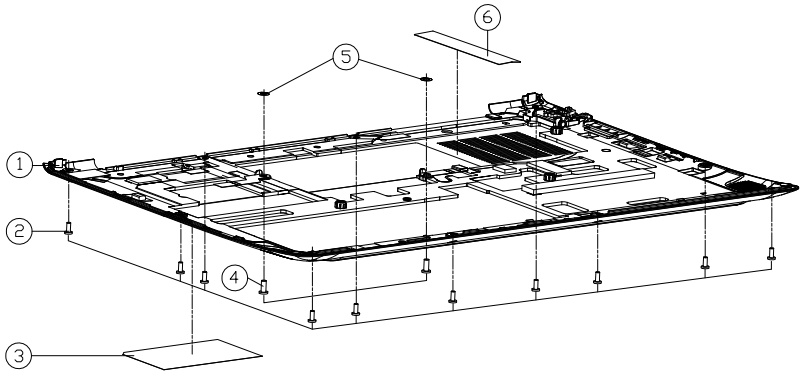


| ITEM | PART NAME | PART NO | REMARK |
|---|---|---|---|
| 1 | BOTTOM CASE MODULE N131BU | 6-39-N1313-012 | |
| 2 | SCREW M2*5L K(CT=0.8 D=4.0) BK/Z ICT NY | 6-35-B6120-5R0 | |
| 3 | PRODUCT LABEL FOR N140WU | 6-45-N140WU03-010 | |
| 3 | PRODUCT LABEL FOR N141WU | 6-45-N141WU03-010 | |
| 4 | .SCREW M2.5*6L K BZ ICT NY | 6-35-82125-6RA | |
| 5 | WASHER #6x#3x0.6t (MYLAR) FOR 3X(B/C LCD(AYU/HT14X12) | 6-37-02000-603 | ONLY FOR N140WU |
| 6 | BOTTOM CASE CPU THERMAL MYLAR N140WU | 6-40-N14W3-010 | |

# LCD

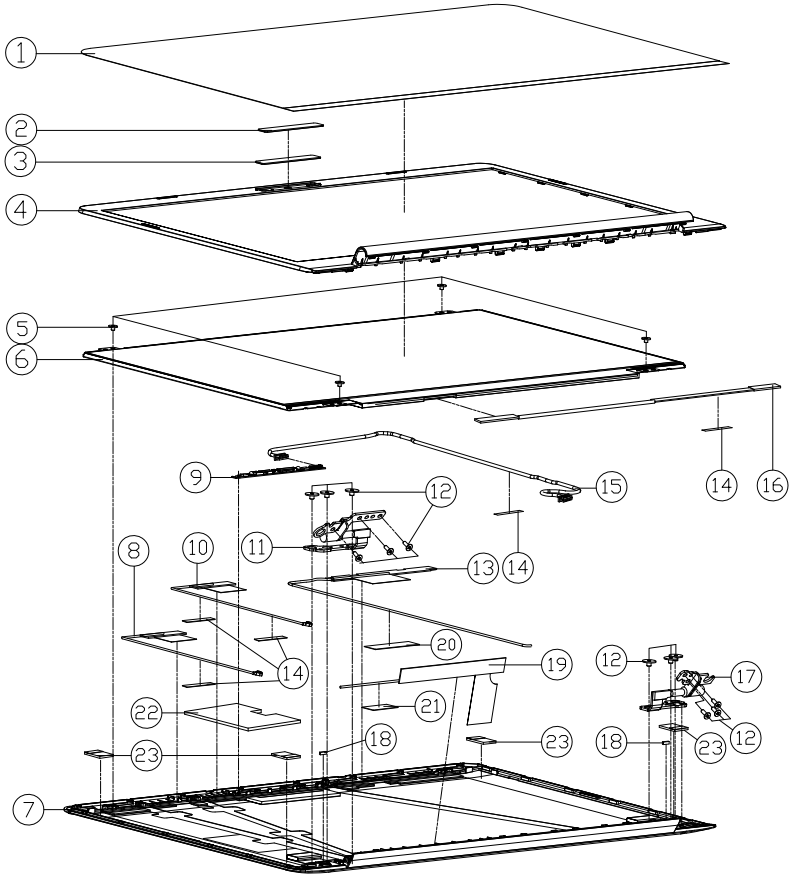


| ITEM | PART NAME | PART NO | REMARK |
|---|---|---|---|
| 1 | LCD PROTECT MYLAR BOPP N130BU | 6-40-N1308-011 | |
| 2 | CCD LENS PMMA N140WU | 6-42-N14W1-021 | 擇一選配 |
| 3 | CCD W/IR LENS PMMA N140WU | 6-42-N14W1-030 | 擇一選配 |
| 4 | FRONT COVER MODULE N140WU | 6-39-N14W1-010 | |
| 4 | FRONT COVER MODULE N141WU | 6-39-N1411-011 | |
| 5 | SCREW M2*2L KI NI ICT NY (DD=Ø5 ,T=0.5) | 6-35-B1120-2R0 | FOR 6-50-J8B30-G001<br>6-50-J8B30-V000 |
| 6 | LCD N14.0" FHD/WVA/N4/NON GT/EDP INNOLUX N140HCA-EBC (REV:C1) LED 3.0MM | 6-50-JBB30-V011 | |
| 6 | LCD N14.0" FHD/WVA/N4/NON GT/EDP AU B140HAN04.0 LED 3.0MM | 6-50-JBB30-G010 | |
| 6 | LCD N14.0" HD/NON GT/EDP AU B140XTN07.1 LED 3.0MM | 6-50-J8B30-G001 | |
| 6 | LCD N14.0" HD/NON GT/EDP INNOLUX N140BGA-EA4 (REV:C1) LED 3.0MM | 6-50-J8B30-V000 | |
| 7 | BACK COVER MODULE N140WU | 6-39-N14W1-020 | |
| 7 | BACK COVER MODULE N141WU | 6-39-N1411-021 | |
| 8 | ANTENNA IPEX4 WLAN WGT WL1 PCB AL 2.4G/5GHZ WL1=350MM N650DU | 6-23-7N650-010 | |
| 9 | WC CAMERA CHICONY FOXBOD CAMFA2CB2R2A 1M HD DWYER WRMW FIGHD WWHEE-LED W/O MIC W/SHIELDING CXD4MMXXX DOBBED | 6-88-N14WC-5101 | |
| 10 | ANTENNA IPEX4 WLAN WGT WL2 PCB AL 2.4G/5GHZ WL2=400MM N140WU | 6-23-7N14W-021 | |
| 11 | HINGE L (SK7+SUS304) N140WU | 6-33-N14W1-0L1 | |
| 12 | SCREW M2.5*2.5L KI BK/Z ICT NY(Ø8,T=0.6) | 6-35-B6125-2R5 | |
| 13 | ANTENNA IPEX4 LTE WGT LTE1 PCB BL 0.7G/0.9G/1.5G/1.9G/2.1G/2.6GHZ LTE1=450MM N140WU | 6-23-7N14W-012 | |
| 14 | TAPE MYLAR TRANSPARENT (20*10*0.05) P180HM | 6-40-P1803-020 | |
| 15 | WIRE CABLE FOR CCD 450MM (I) 30V 8P TO 12P N140WU | 6-43-N14WT-021-1 | ONLY FOR CCD LENS |
| 15 | WIRE CABLE FOR IR CCD 450MM (I) 30V 12P N140WU | 6-43-N14WT-011 | ONLY FOR IR CCD LENS |
| 16 | WIRE CABLE FOR EDP 400MM (I) 30V 30P TO 40P OAL/LV CONLV8C030-212-HF) N140WU | 6-43-N14W1-011-N | |
| 17 | HINGE R (SK7+SUS304) N140WU | 6-33-N14W1-0R1 | |
| 18 | RUBBER FOR INNOLUX PANEL(4.5*1.5*1T) N140WU | 6-47-N14W1-040 | ONLY FOR 6-50-JBB30-G010 |
| 19 | ANTENNA FOR INNEL CXDE ONLY) XED-4-3G4LE WGT LTE-2 PCB BL 0.7G/0.8G/0.9G/1.7G/1.8G/1.9G/2.1G/2.6GHZ LE=350MM N140WU | 6-23-7N14W-031 | |
| 20 | TAPE MYLAR (C),MYLAR M550J | 6-40-M55J2-030 | |
| 21 | ACETATE TAPE (32*10*0.2T) N141WU | 6-40-N1411-020 | |
| 22 | BACK SPONGE 60*40*1.65T N141WU | 6-47-0019A-60Q | ONLY FOR 6-50-JBB30-G010 |
| 23 | BACK COVER SPONGE SIDE(15*10*1.15T) CR4382 N140WU | 6-47-0019A-16C | ONLY FOR 6-50-JBB30-G010 |

*Figure A - 3*
**LCD**

A.Part Lists

# MB

*Figure A - 4*
**MB**

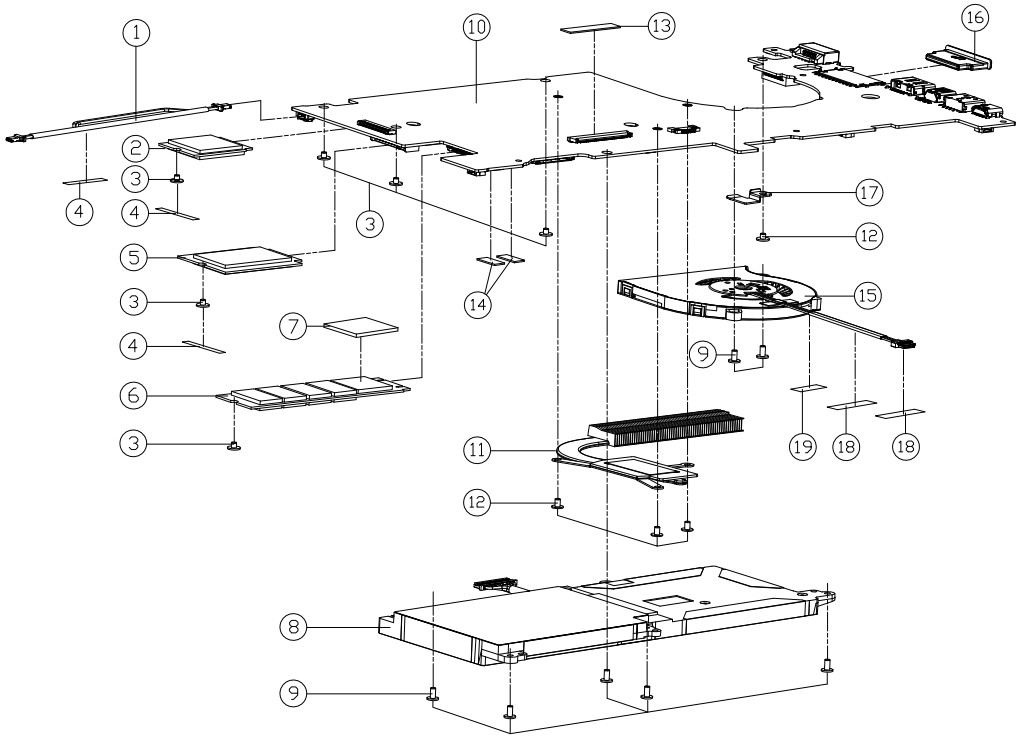


| ITEM | PART NAME | PART NO | REMARK |
|---|---|---|---|
| 1 | DC CABLE TO MB 100MM 19V 2P BLUE MARK(5B200-082H0H0-00D) N130BU | 6-43-N1300-051-1 | |
| 2 | ALL-IN-1T COMBO DUAL BAND INTEL SANDY PEAK 2600MHZ CO 4G-HT DDR2 M2 2230 PCSIRC | 6-88-P65SF-4210 | OPTION |
| 2 | ALL-IN-1T COMBO DUAL BAND INTEL WINDSTORM PEAK 1933MHZ NON-VPRO 2G 4G-HT DDR2 M2 2230 PCSIRC | 6-88-P65SF-4200 | OPTION |
| 2 | ALL-IN-1T COMBO DUAL BAND INTEL WHARFED PEAK 2.93GHZ NON-VPRO 2G 4G-HT DDR2 M2 2230 PCSIRC | 6-88-P75FF-4210 | OPTION |
| 3 | SCREW M2*2L KI NI ICT NY (DD=#5 ,T=0.5) | 6-35-B1120-2R0 | |
| 4 | TOP CASE MYLAR FR83 25*7*0.05 P180HM | 6-40-P1802-030 | |
| 5 | 1.0 W MODULE BRAND:BENQ-TRIANGE VERSION:B2C0A0A0B0 FOR DRAWING NO:5A00-N30 DESCRIPTION:BENQ-TRIANGE OPTIONAL | 6-88-N5506-B802 | OPTION |
| 6 | SSD M2 2280 1TB(1000GB) INTEL S3500SXXV0010G (S4KS) SATA3 | 6-85-D511T-Z00 | OPTION |
| 6 | SSD M2 2280 256GB SANDIX SDSCNV-256 (MLC) SATA3 CONNECT SDM MLC) TW2CCCXM | 6-85-D51R6-200 | OPTION |
| 6 | SSD M2 2280 512GB PHISON ESMP512GTM2-E7 (E7) PCIE G2X4 MLC | 6-85-D515B-H00 | OPTION |
| 6 | SSD M2 2280 64GB INTEL 9CMFCL0L4GAE1 (OPTANE MEMORY SDM) 10X8B/B PCIE G2X4 3D XPOINT | 6-85-D5164-Z00 | OPTION |
| 6 | SSD M2 2280 512GB SAMSUNG MZVLB512HAJQ-00000 (PM981) PCIE G3X4 3D TLC 64 LAYERS | 6-85-D515B-S08 | OPTION |
| 6 | SSD M2 2280 512GB INTEL SSDPEKKW512G7 (660P) PCIE G3X4 3D TLC FW9P3D0C | 6-85-D515B-Z00 | OPTION |
| 6 | SSD M2 2280 256GB MICRON MTFDDAV256TBN (2100) SATA3 (MICRON 3D TLC 64 LAYERS) | 6-85-D51R6-101 | OPTION |
| 6 | SSD M2 2280 256GB PHISON ESMP256GTM2-E3 (2D) SATA3 (TOSHIBA 3D TLC 64 LAYERS) FW3BAT0Q | 6-85-D51R6-H04 | OPTION |
| 7 | THERMAL PAD RS300(30*20*1.5) N130BU | 6-48-N1302-010 | |
| 8 | DELP S L1 D14V/120W/360W 3CP GETACH(VIDEON CO) CABLE ID 5C(CHICONY) N130BU | 6-87-N130S-3U9A1 | |
| 8 | DELP S L1 D14V/120W/360W 3CP DPV(HIGH POWER CO) CABLE ID 9B(FOXNUM) N130BU | 6-87-N130S-31A01 | |
| 9 | .SCREW M2*4L KI NI ICT NY (DD=#4.5,DT=0.4) | 6-35-B1120-4RE | |
| 10 | MAIN BDW(BCPU/I5-8250U/15G) V40 (EIPX0TD3DAX/LTE,PM)(ES CHANGED N140WU) | 6-77-N140WU00-D04-E | |
| 10 | MAIN BDW(BCPU/I3-8130U/15G) V40 (EIPX0TD3DAX/LTE,PM)(ES CHANGED N140WU) | 6-77-N140WU00-D04-K | |
| 10 | MAIN BDW(BCPU/I3-8130U/25G) V40 (EIPX0TD3DAX/LTE,PM)(ES CHANGED N140WU) | 6-77-N140WU00-D04-L | |
| 10 | MAIN BDW(BCPU/I7-8550U/18G) V40 (EIPX0X53DAX/LTE,PM) N140WU | 6-77-N140WU00-D04-1D | |
| 10 | MAIN BDW(BCPU/I3-8130U/18G) V40 (EIPX0X53DAX/LTE,PM) N140WU | 6-77-N140WU00-D04-1K | |
| 10 | MAIN BDW(BCPU/I7-8550U/18G) V40 (EIPX0X53DAX/LTE(W/O) PM) N140WU | 6-77-N140WU00-D04-2D | |
| 10 | MAIN BDW(BCPU/I7-8550U/18G) V40 (EIPX0X53DAX/PM(W/O) LTE) N140WU | 6-77-N140WU00-D04-3D | |
| 10 | MAIN BDW(BCPU/I7-8550U/18G) V40 (EIPX0X53DAX/W/O LTE,PM) N140WU | 6-77-N140WU00-D04-4D | |
| 11 | CPU HEATSINK MODULE N140WU | 6-31-N14WN-101 | |
| 12 | SCREW M2*3L KI BZ ICT NY (DD=#4.5,DT=0.4) | 6-35-B6120-3RD | |
| 13 | KB CONNECTOR MYLAR 25*6.5*0.5T FR83 N130BU | 6-40-N1303-011 | |
| 14 | DDR4 SOCKET RUBBER(10.8*5) SILICONE P650RE6 | 6-47-P65RS-011 | |
| 15 | FAN MODULE (ADDA) N140WU | 6-31-N14WS-101 | |
| 16 | DUMMY SD RUBBER (SILICON RUBBER) N130BU | 6-47-N1308-012 | |
| 17 | CABLE FIX BKT(SGCC) N130BU | 6-33-N1303-011 | |
| 18 | TAPE MYLAR (C),MYLAR M550J | 6-40-M55J2-030 | |
| 19 | TAPE MYLAR TRANSPARENT (20*10*0.05) P180HM | 6-40-P1803-020 | |

# Appendix B: Schematic Diagrams

This appendix has circuit diagrams of the ***N140WU / N141WU*** notebook's PCB's. The following table indicates where to find the appropriate schematic diagram.

| Diagram - Page | Diagram - Page | Diagram - Page |
|---|---|---|
| *System Block Diagram - Page B - 2* | *PS8338B - Page B - 18* | *VDD3, VDD5 - Page B - 34* |
| *Processor 1/10 - Page B - 3* | *miniDP - Page B - 19* | *VDDQ, VDDQ_VTT, 1.5VS, 1.8VA - Page B - 35* |
| *Processor 2/10 - Page B - 4* | *AR_TBT - Page B - 20* | *1.0V Series - Page B - 36* |
| *Processor 3/10 - Page B - 5* | *AR_Power - Page B - 21* | *RT3602AE - Page B - 37* |
| *Processor 4/10 - Page B - 6* | *TPS65982 - Page B - 22* | *VCC_In/Out, VCCGT, 2.5V - Page B - 38* |
| *Processor 5/10 - Page B - 7* | *ASM1543 - Page B - 23* | *VCCSA, 2.5V - Page B - 39* |
| *Processor 6/10 - Page B - 8* | *Type C - Page B - 24* | *Charger, DC IN - Page B - 40* |
| *Processor 7/10 - Page B - 9* | *Card Reader & LAN_RTL8411B - Page B - 25* | *USB Board - Page B - 41* |
| *Processor 8/10 - Page B - 10* | *Audio Codec - Page B - 26* | *Audio Board - Page B - 42* |
| *Processor 9/10 - Page B - 11* | *KBC ITE IT8587 - Page B - 27* | *Click Board - Page B - 43* |
| *Processor 10/10 - Page B - 12* | *WLAN/BT, 3G - Page B - 28* | *LED Board - Page B - 44* |
| *DDR4 SO-DIMM_0 - Page B - 13* | *M Key PCIE SSD - Page B - 29* | *DC Jack Board - Page B - 45* |
| *DDR4 SO-DIMM_1 - Page B - 14* | *SATA, LED, LID, SW - Page B - 30* | |
| *HDMI - Page B - 15* | *USB Port / TPM - Page B - 31* | |
| *Panel - Page B - 16* | *Conn, CCD, Fan, TP, LED KB - Page B - 32* | |
| *RTD2136N - Page B - 17* | *3V, 5V, 3VS, 5VS, 1.8VS CTL - Page B - 33* | |

*Table B - 1*
**SCHEMATIC DIAGRAMS**

**Version Note**

The schematic diagrams in this chapter are based upon version 6-7P-N13W6-005. If your mainboard (or other boards) are a later version, please check with the Service Center for updated diagrams (if required).

# System Block Diagram



Sheet 1 of 45
System Block Diagram

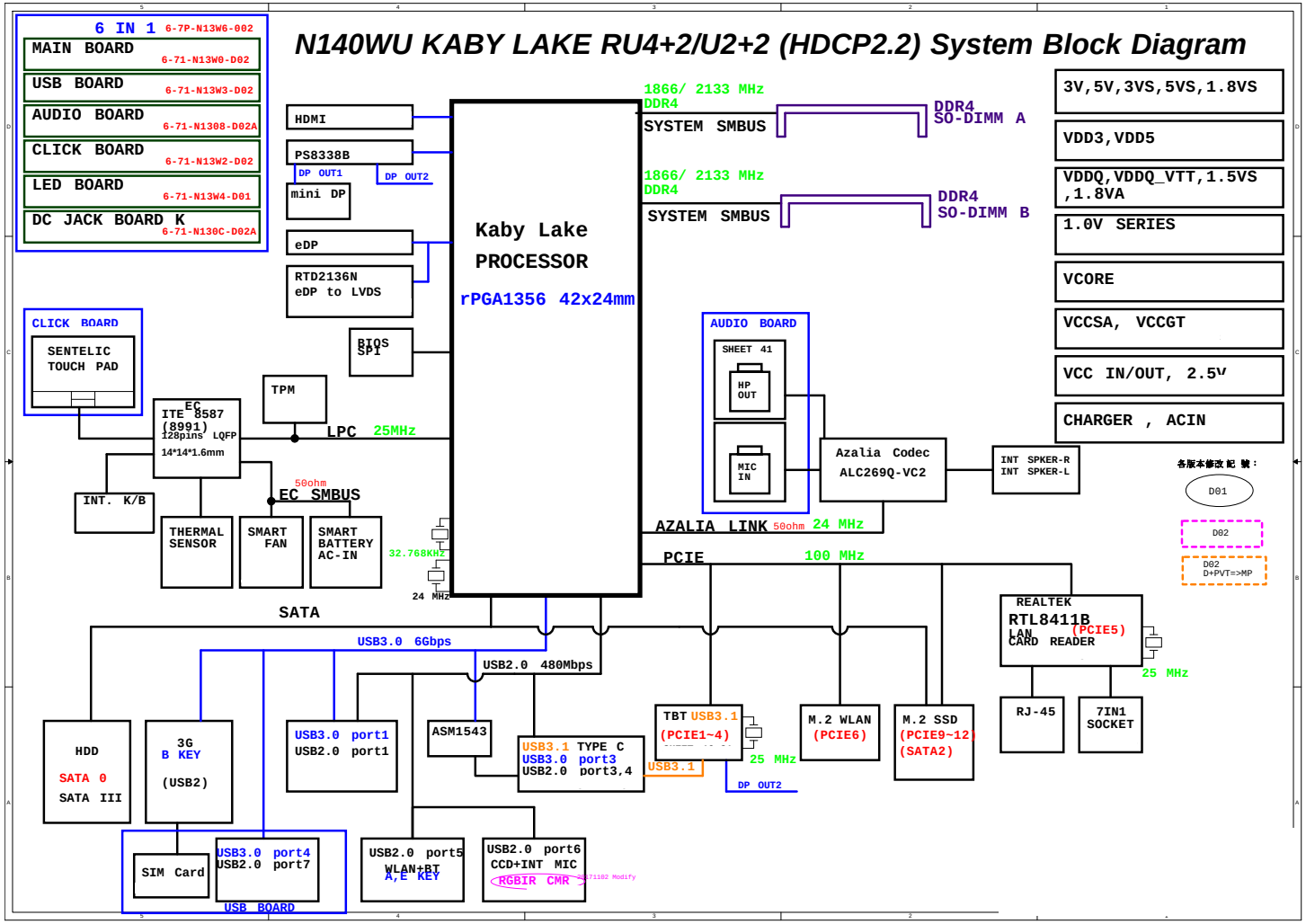

# Processor 1/10

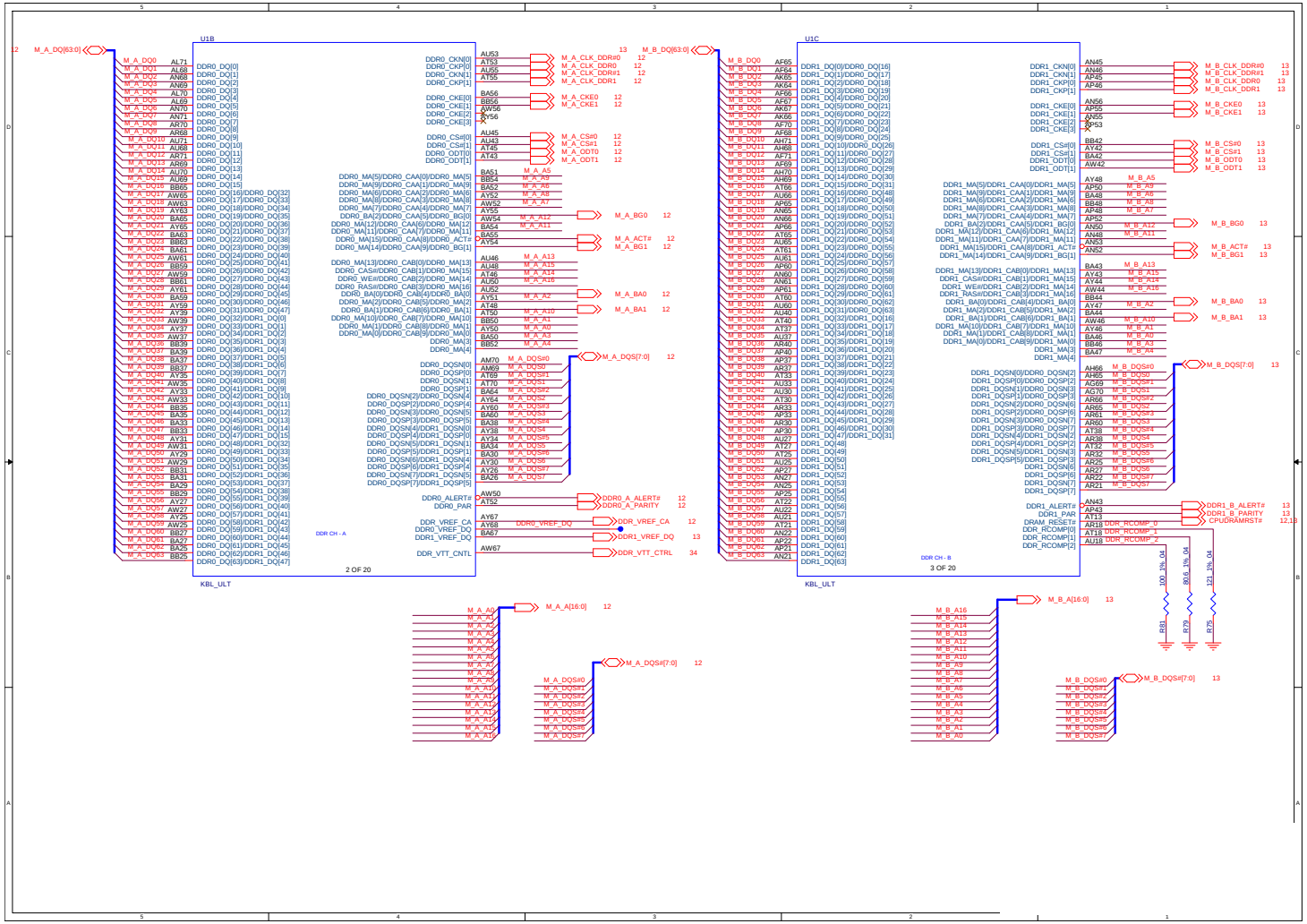


Sheet 2 of 45
Processor 1/10

B.Schematic Diagrams

# Processor 2/10



**Sheet 3 of 45**
**Processor 2/10**

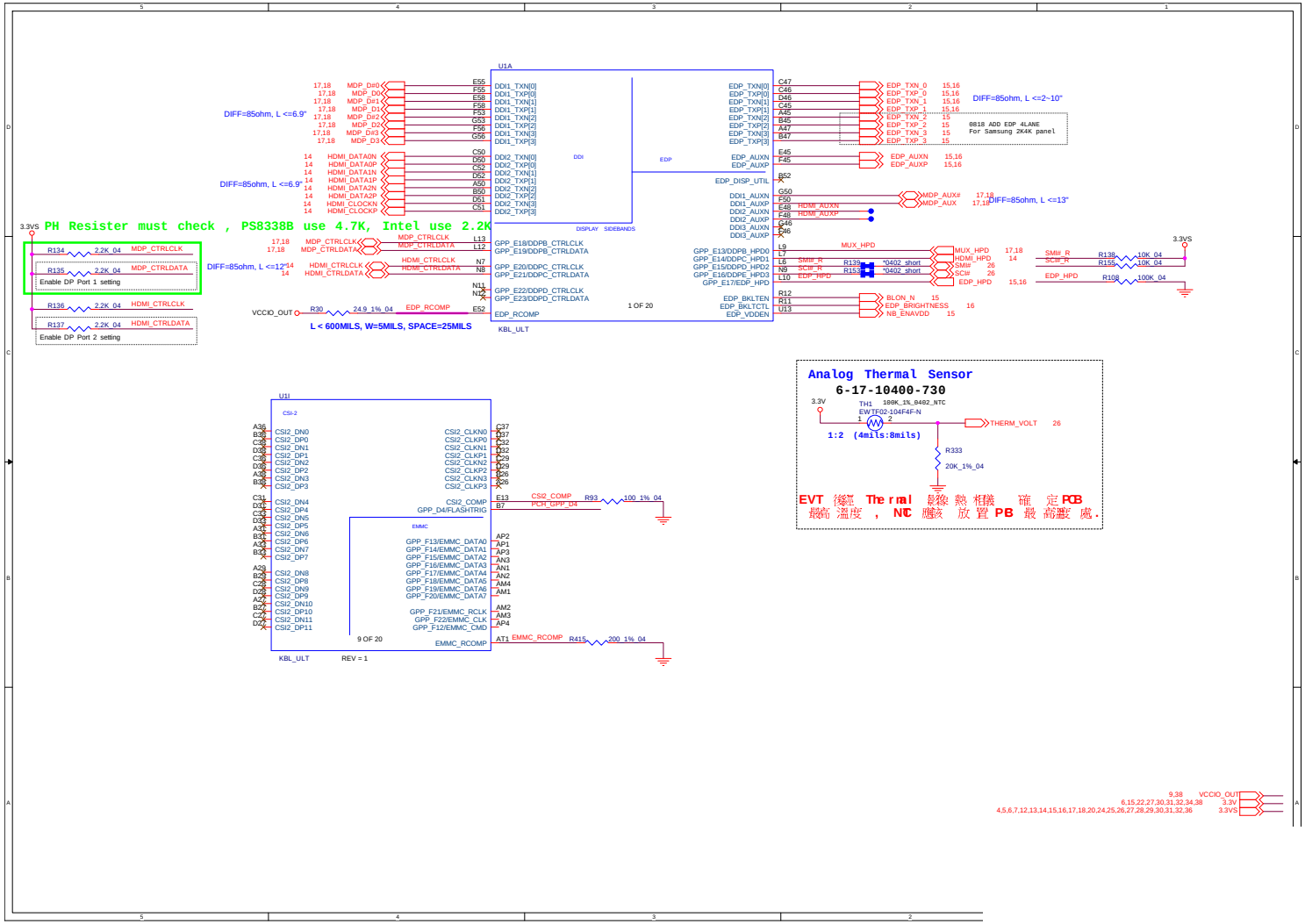

# Processor 3/10

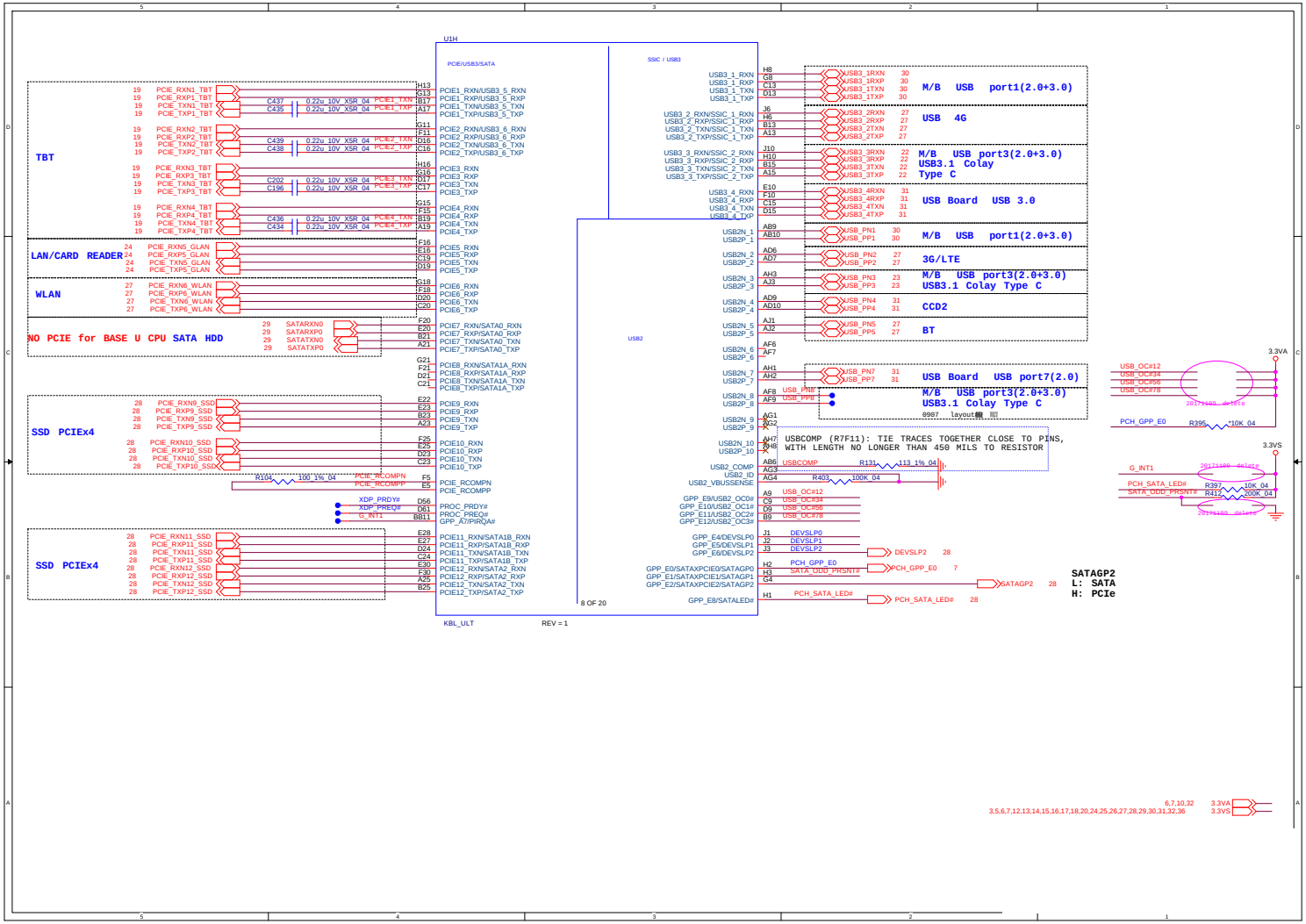


Sheet 4 of 45
Processor 3/10

# Processor 4/10



**Sheet 5 of 45**
**Processor 4/10**

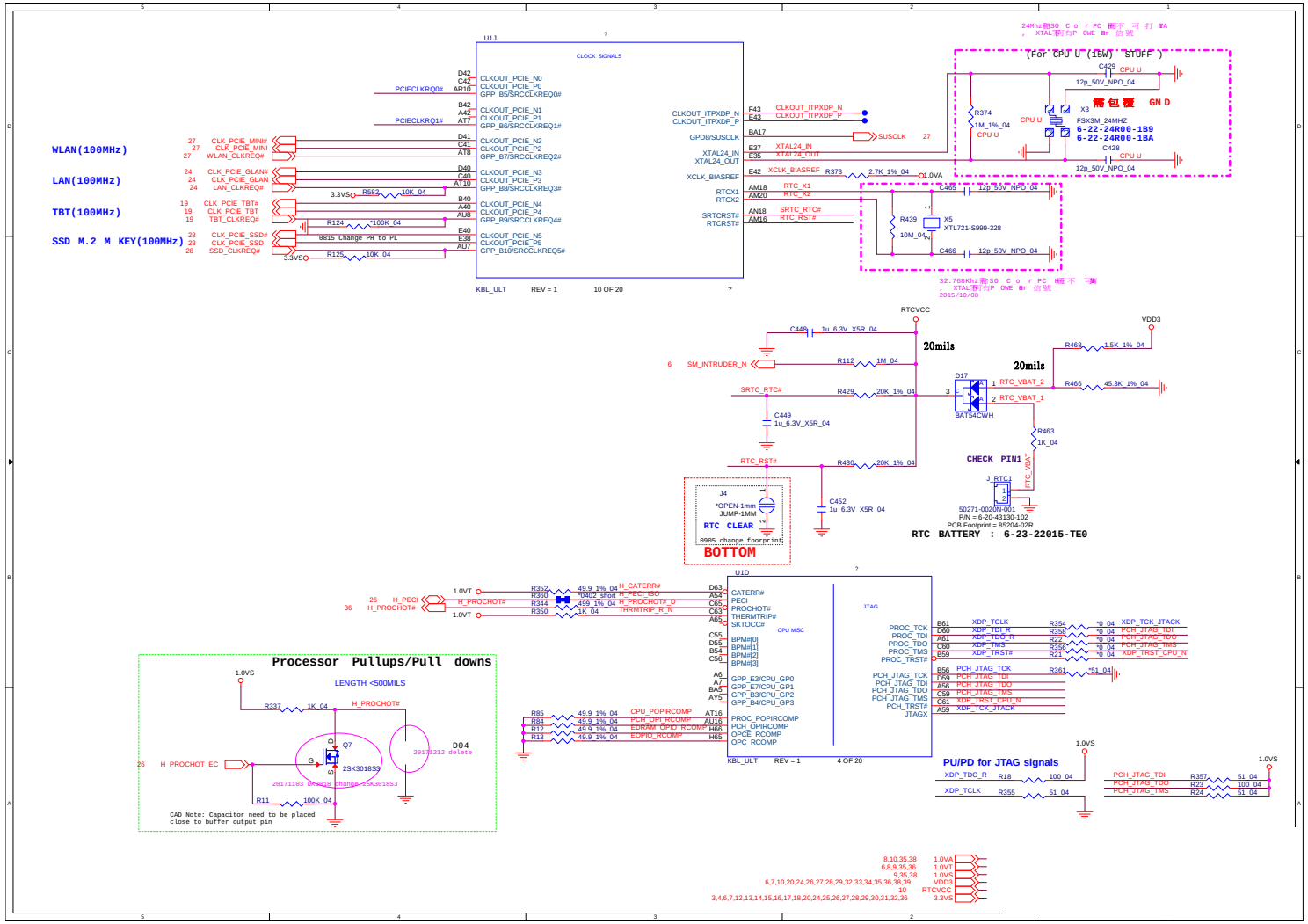

# Processor 5/10

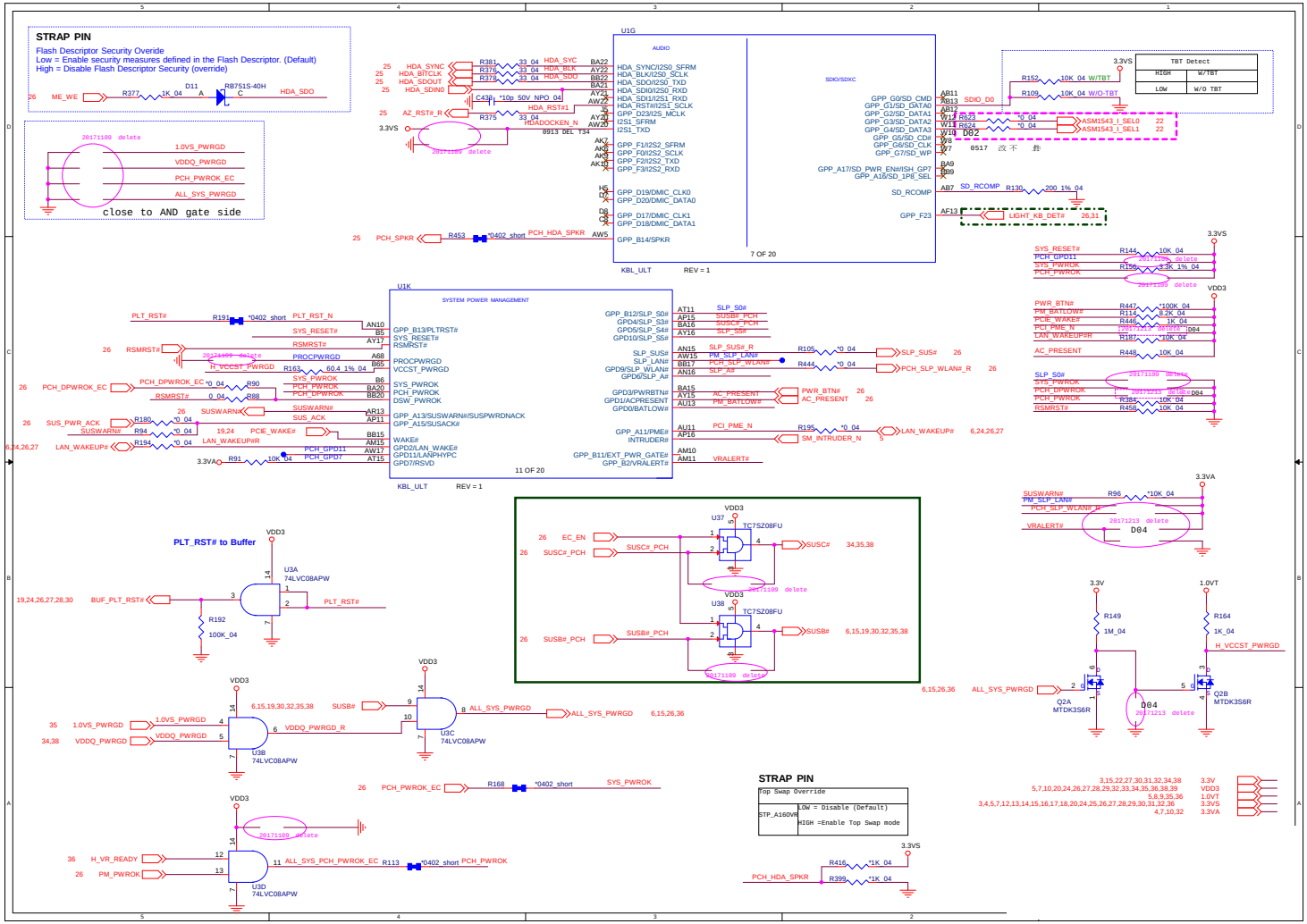


Sheet 6 of 45
Processor 5/10

# Processor 6/10



**Sheet 7 of 45**
**Processor 6/10**

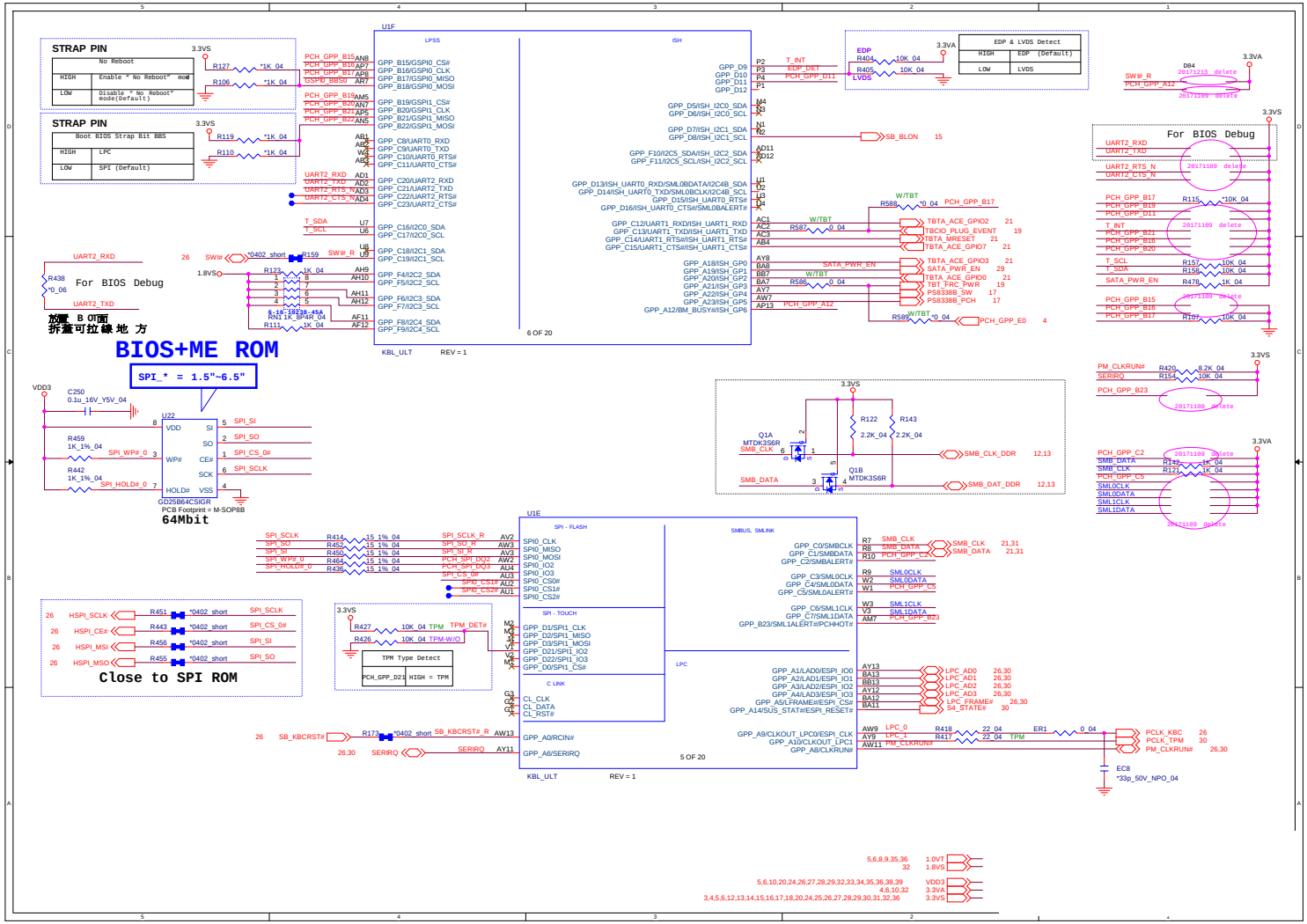

# Processor 7/10

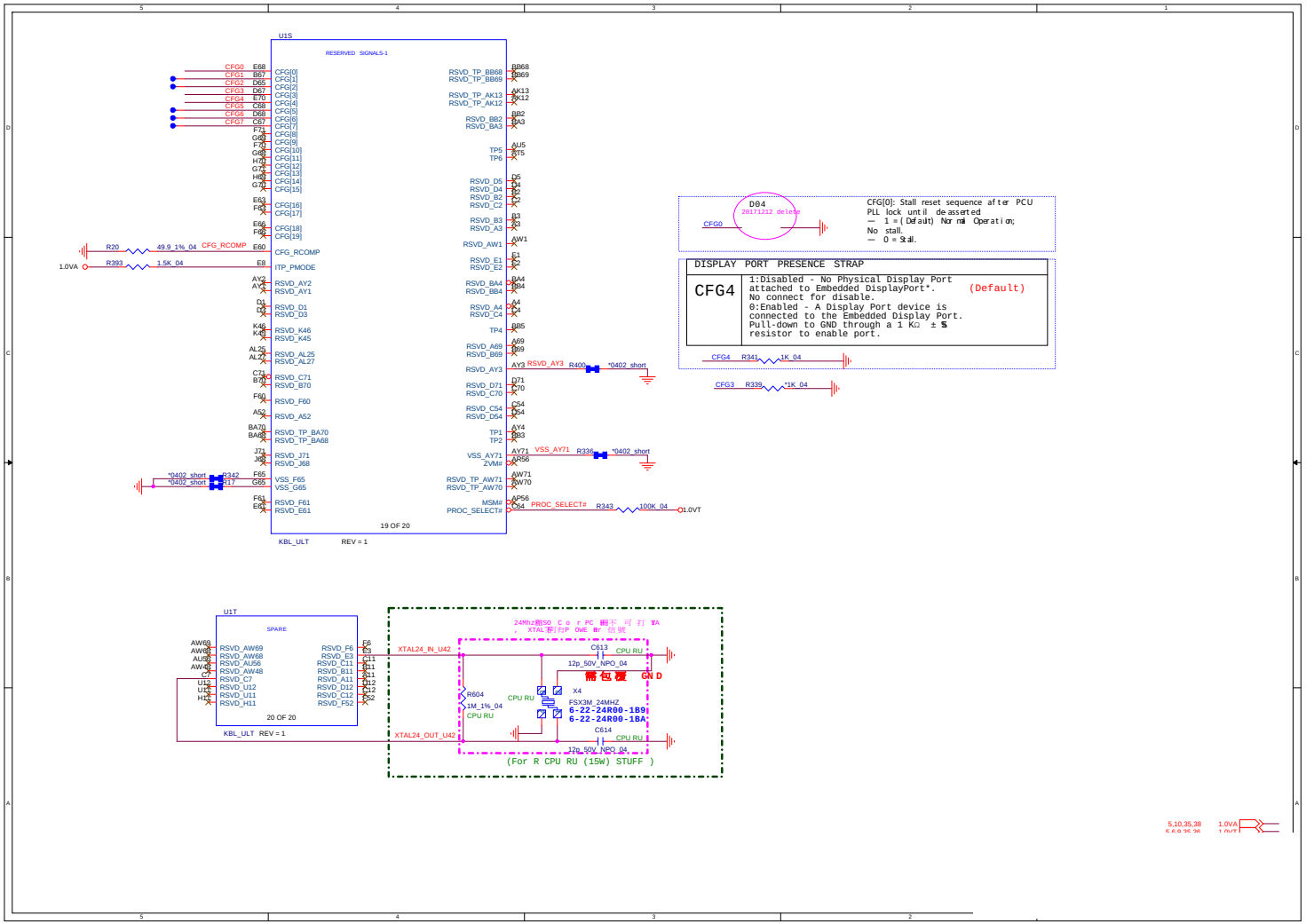


Sheet 8 of 45
Processor 7/10

# Processor 8/10



**Sheet 9 of 45**
**Processor 8/10**

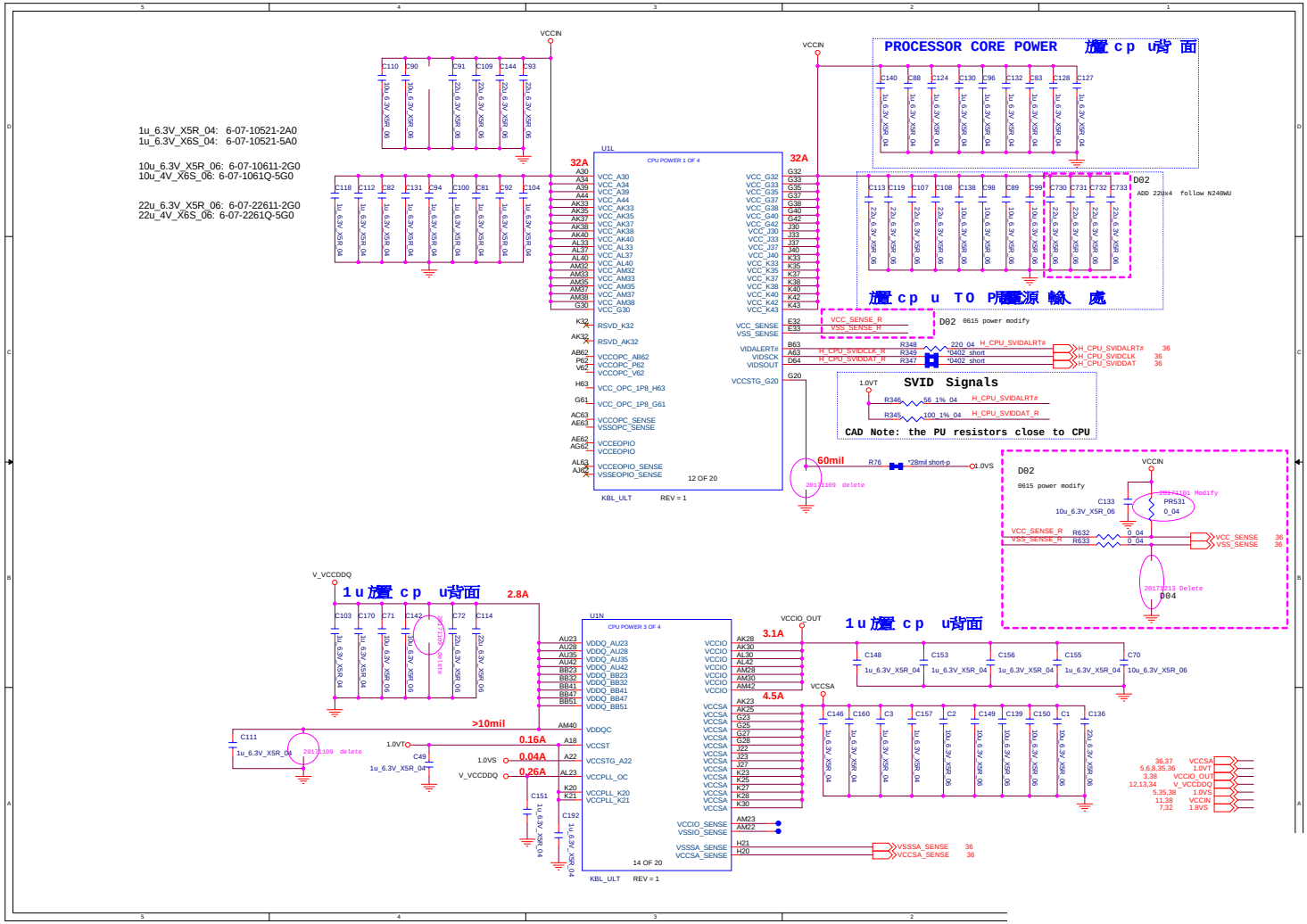

# Processor 9/10

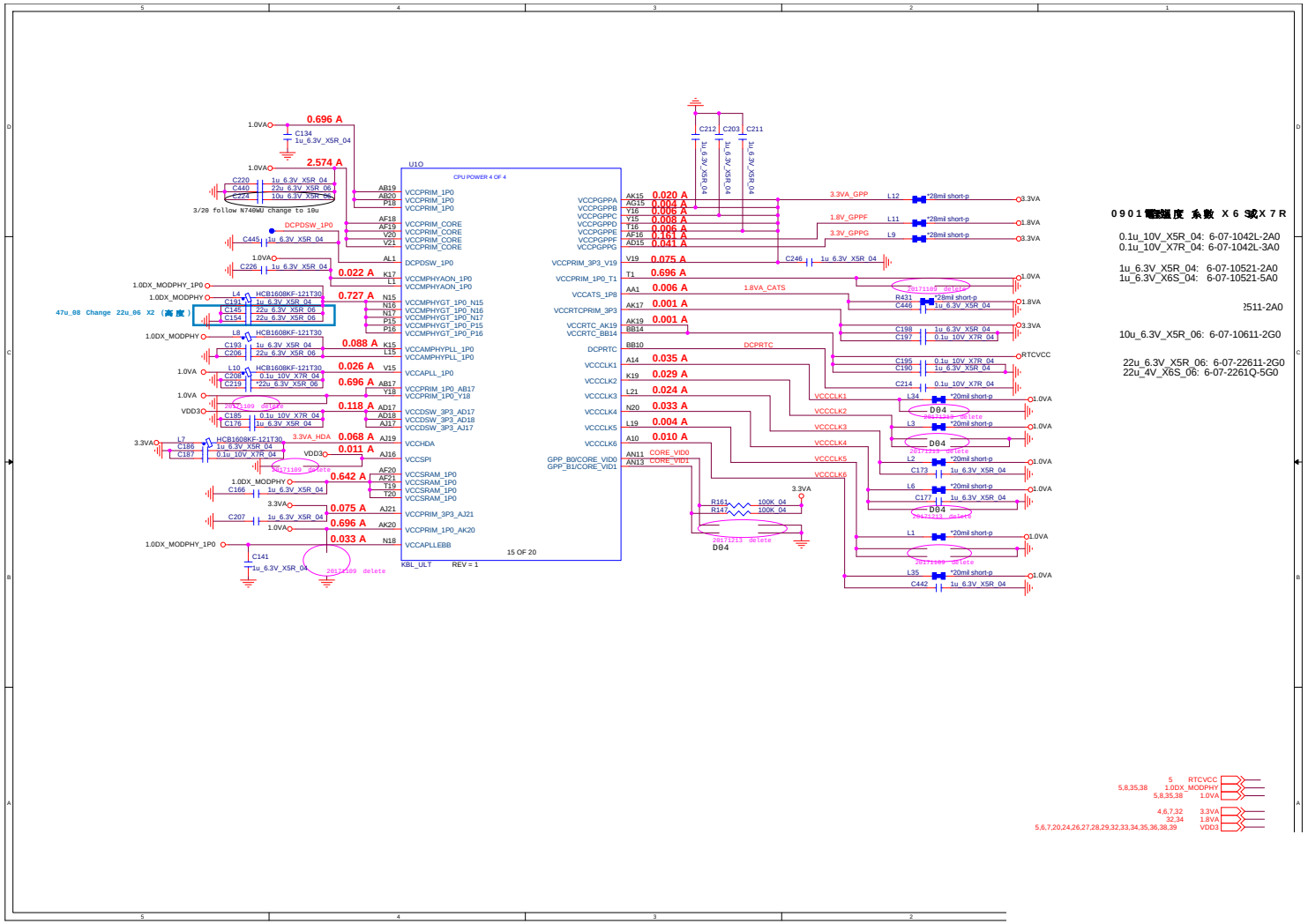


Sheet 10 of 45
Processor 9/10

# Processor 10/10



**Sheet 11 of 45**
**Processor 10/10**

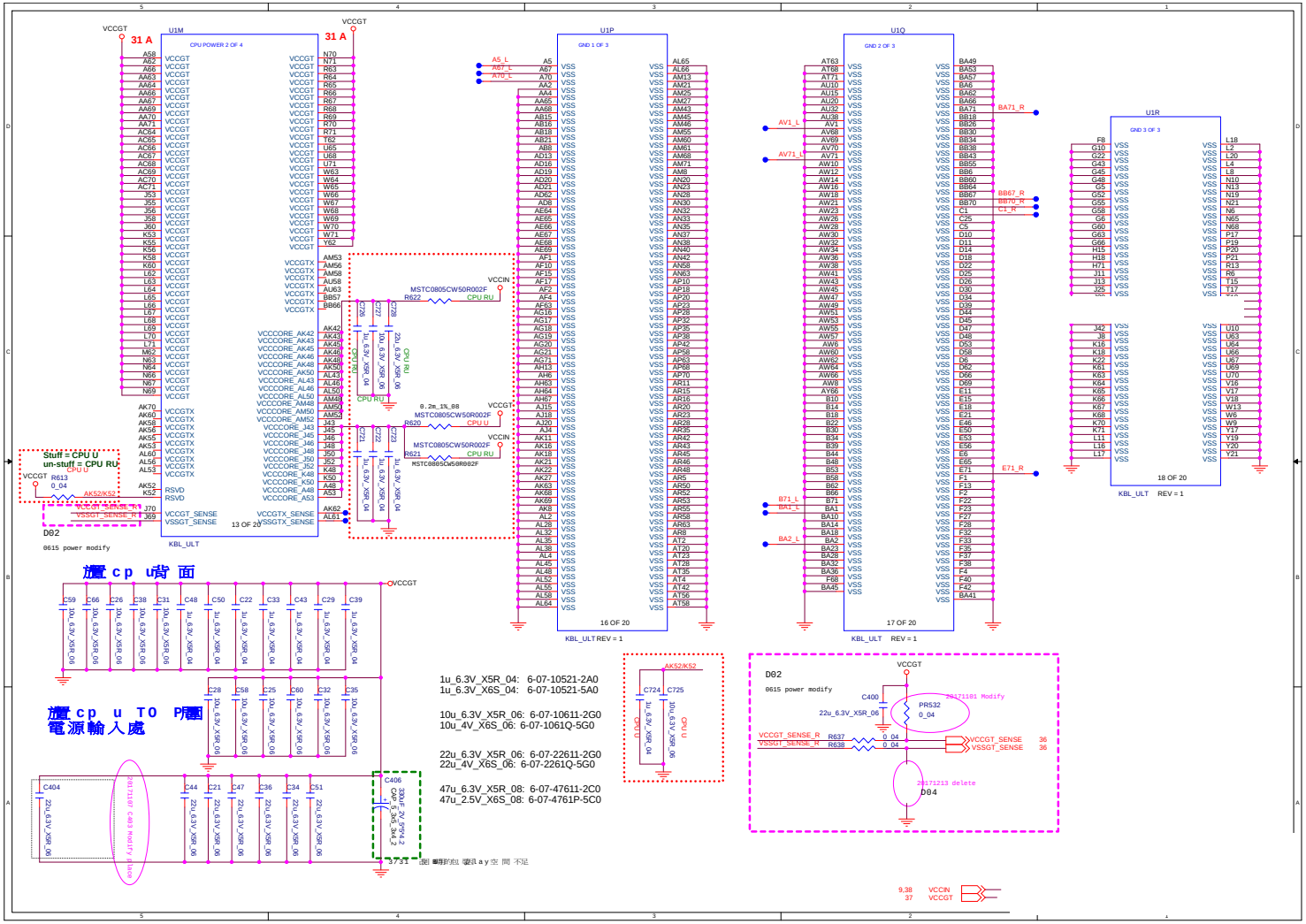

# DDR4 SO-DIMM_0

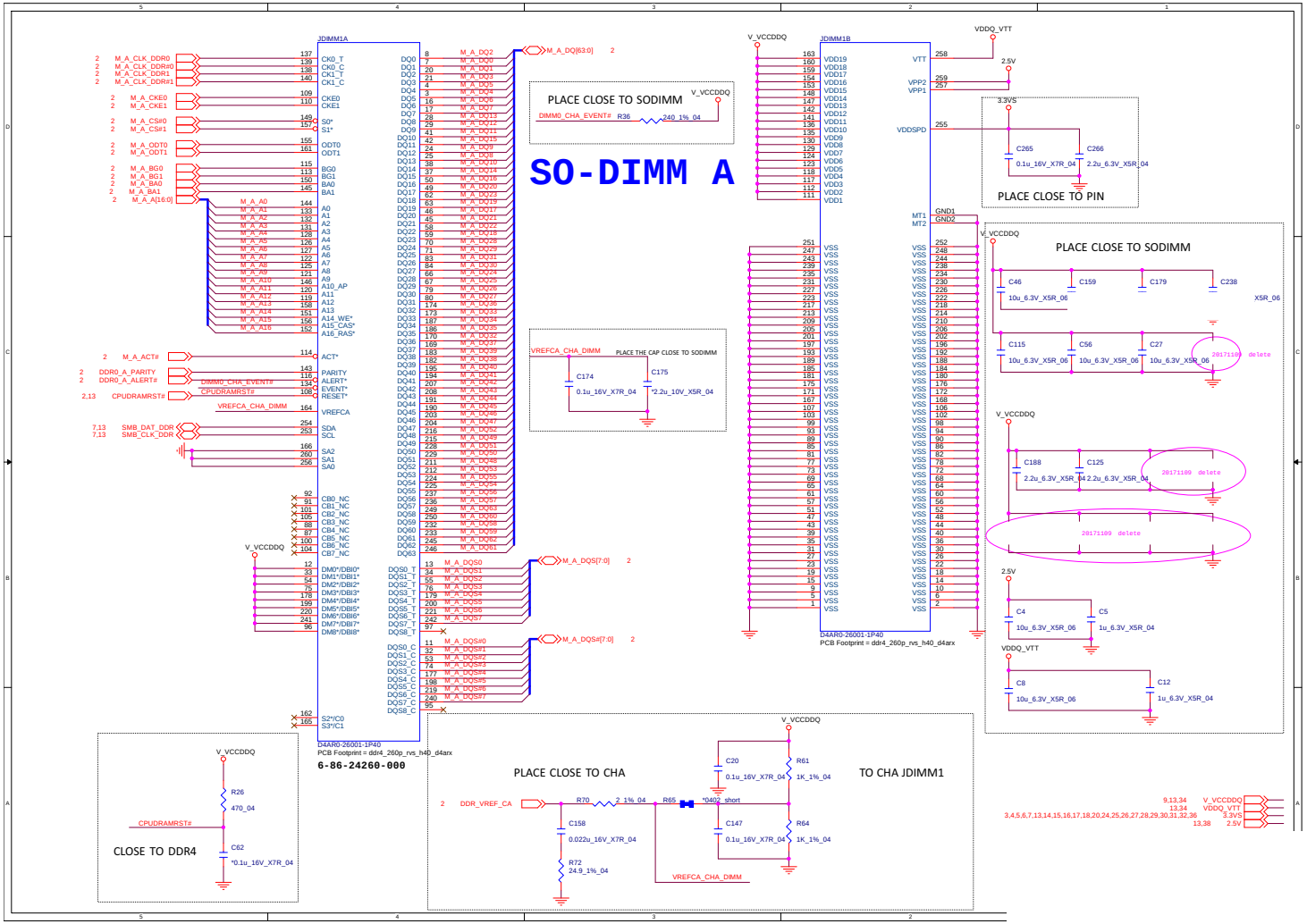


Sheet 12 of 45
DDR4 SO-DIMM_0

# DDR4 SO-DIMM_1



**Sheet 13 of 45**
**DDR4 SO-DIMM_1**

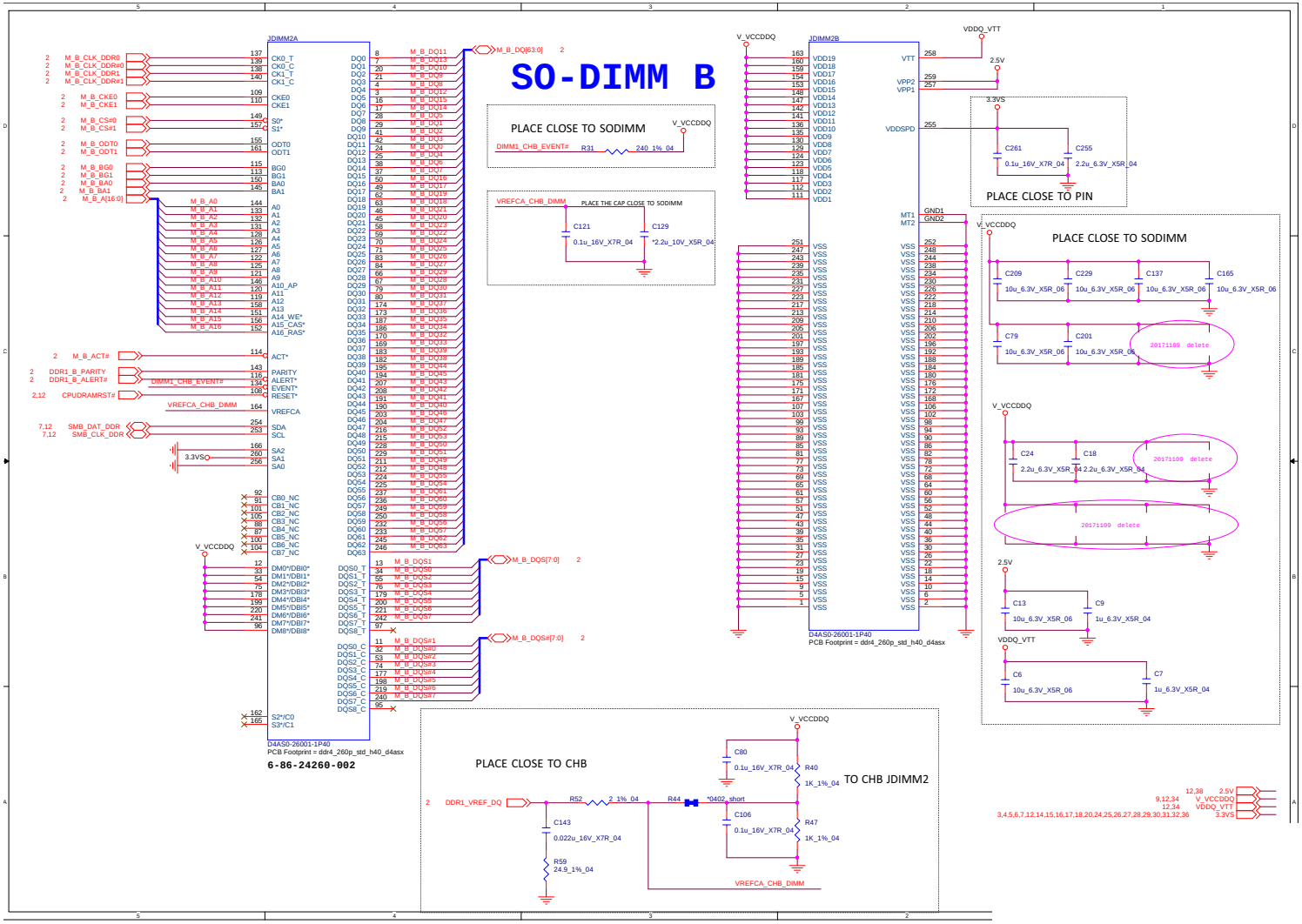

# HDMI

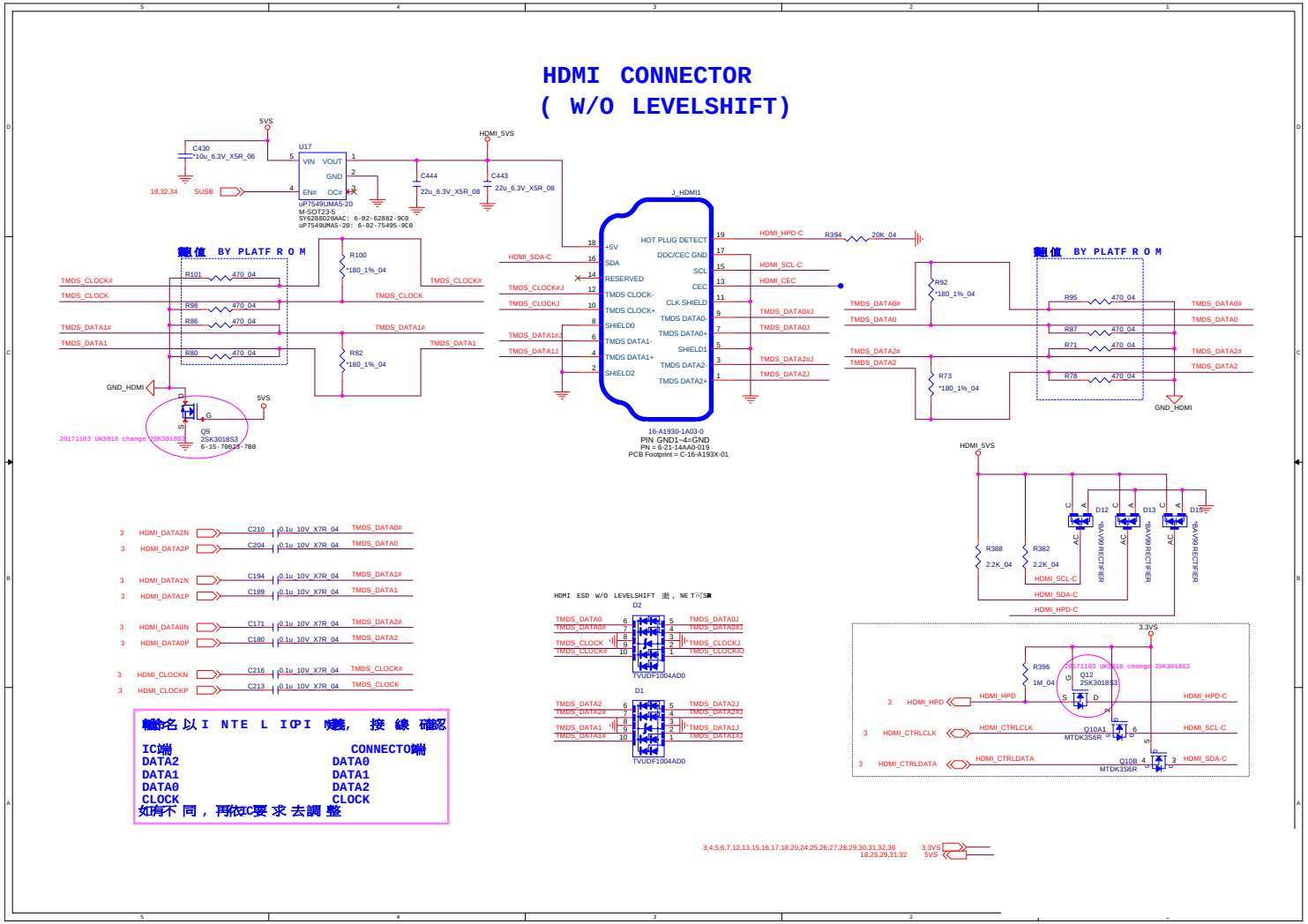


Sheet 14 of 45
HDMI

# Panel



**Sheet 15 of 45**
**Panel**

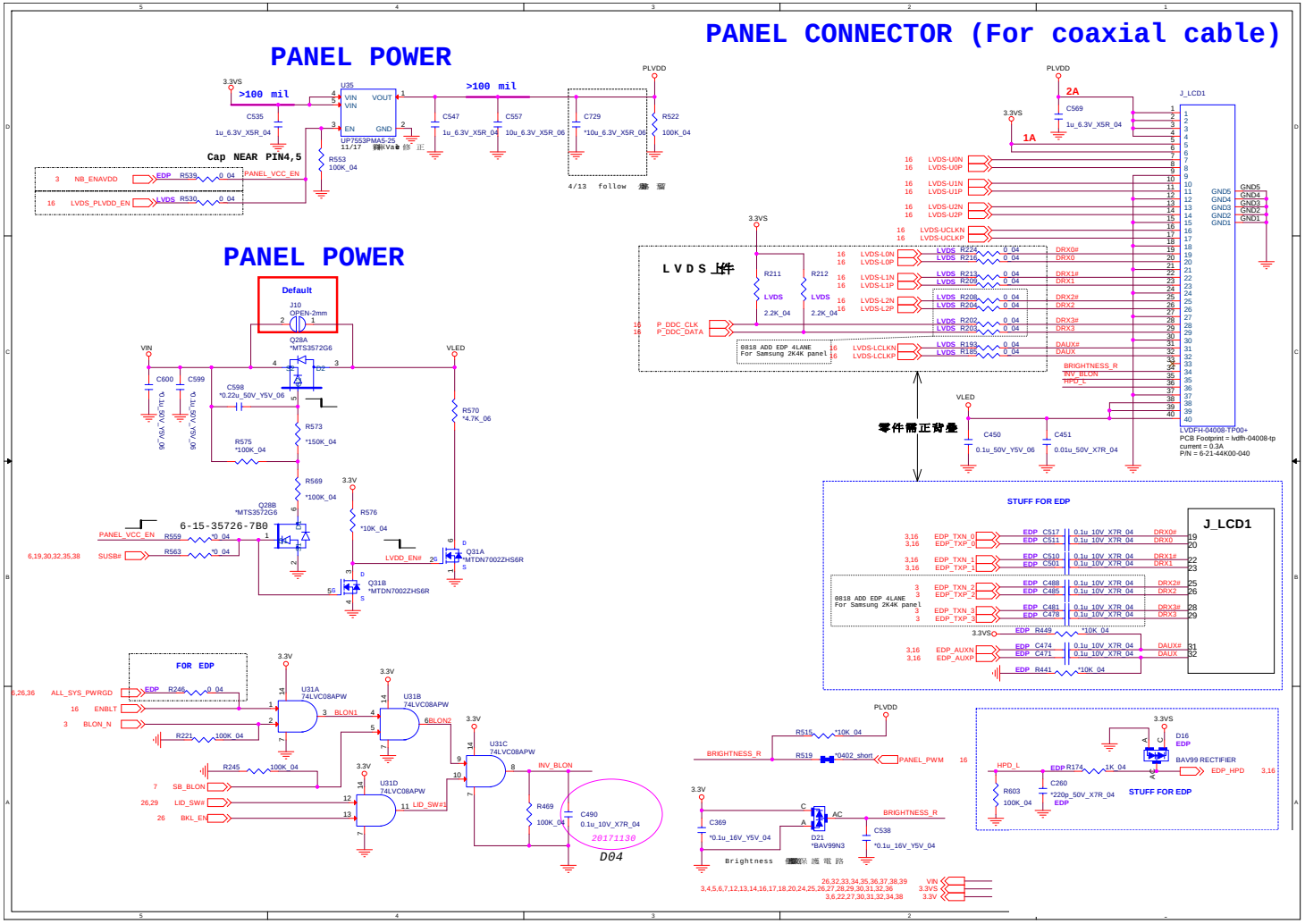

# RTD2136N

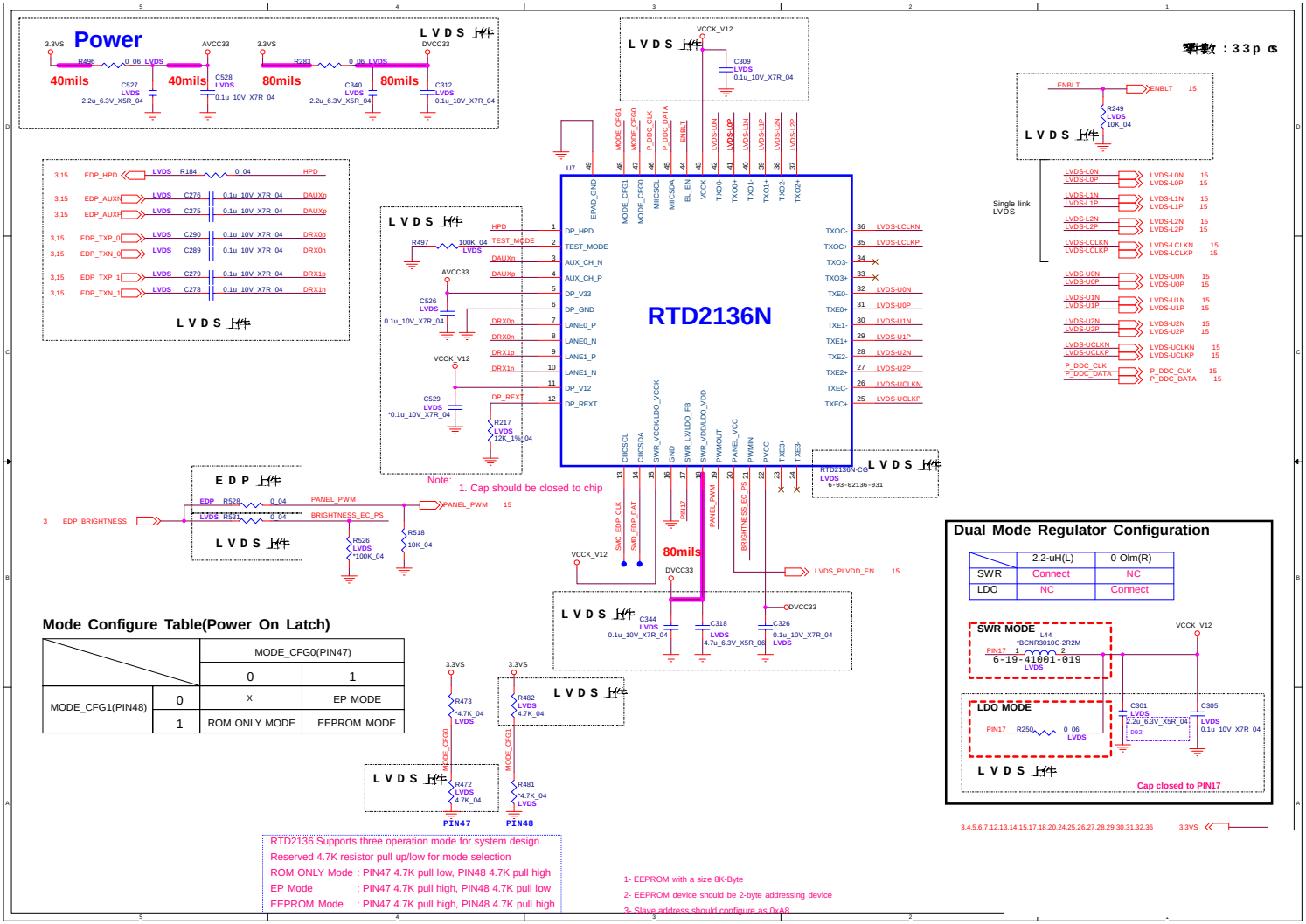


Sheet 16 of 45
RTD2136N

# PS8338B



**Sheet 17 of 45**
**PS8338B**

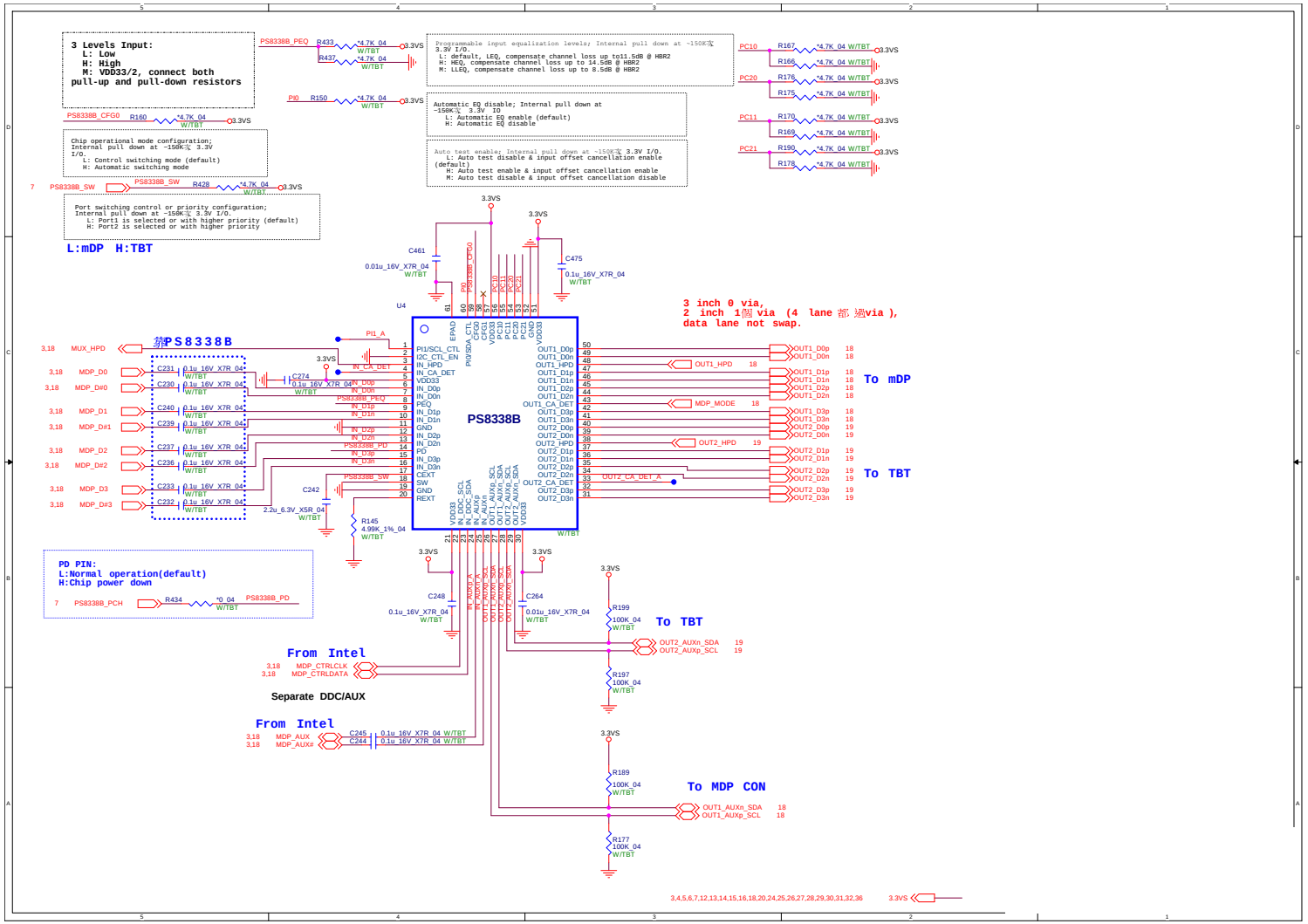

# miniDP

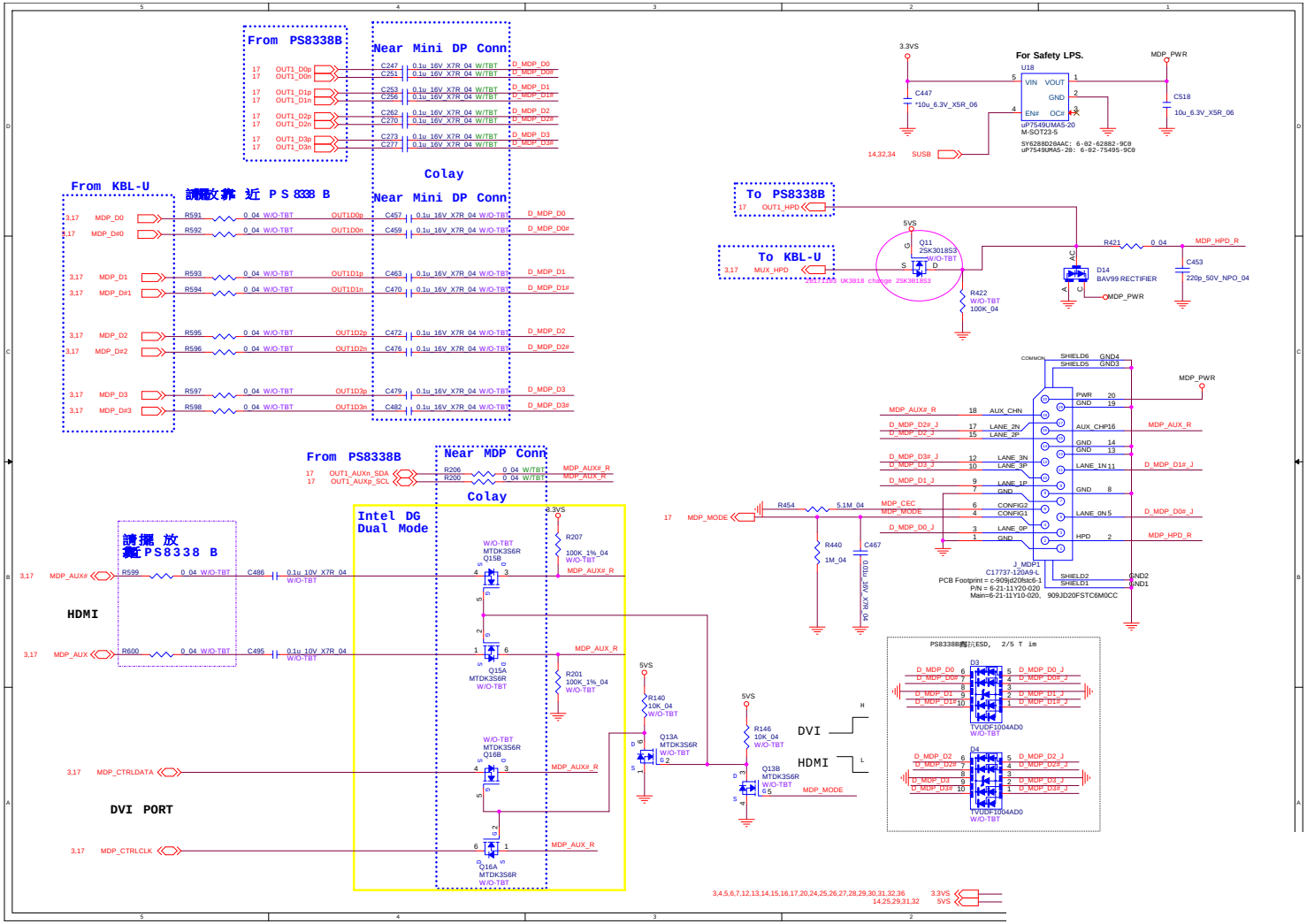


Sheet 18 of 45
miniDP

# AR_TBT



**Sheet 19 of 45**
**AR_TBT**

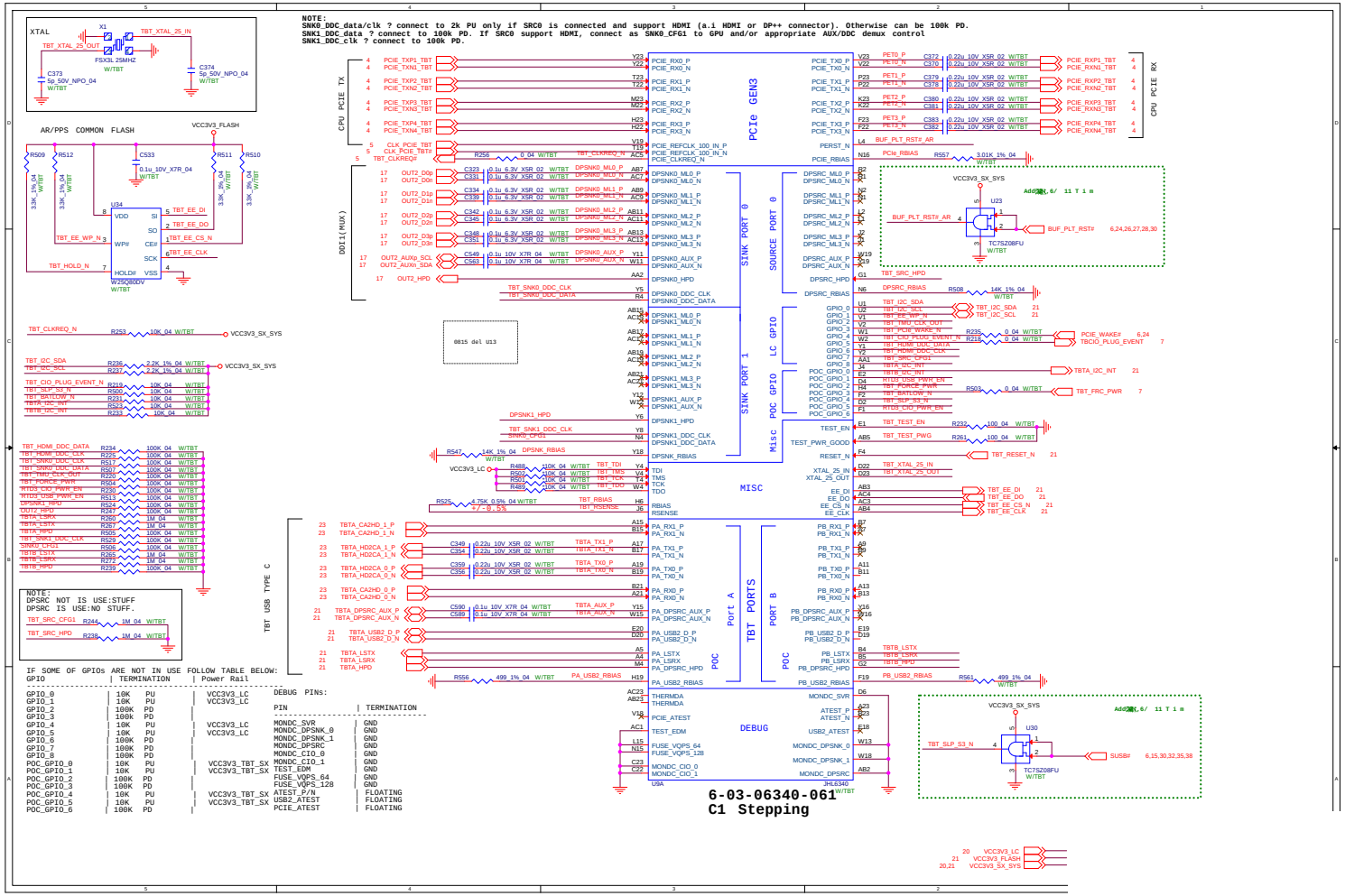

# AR_Power

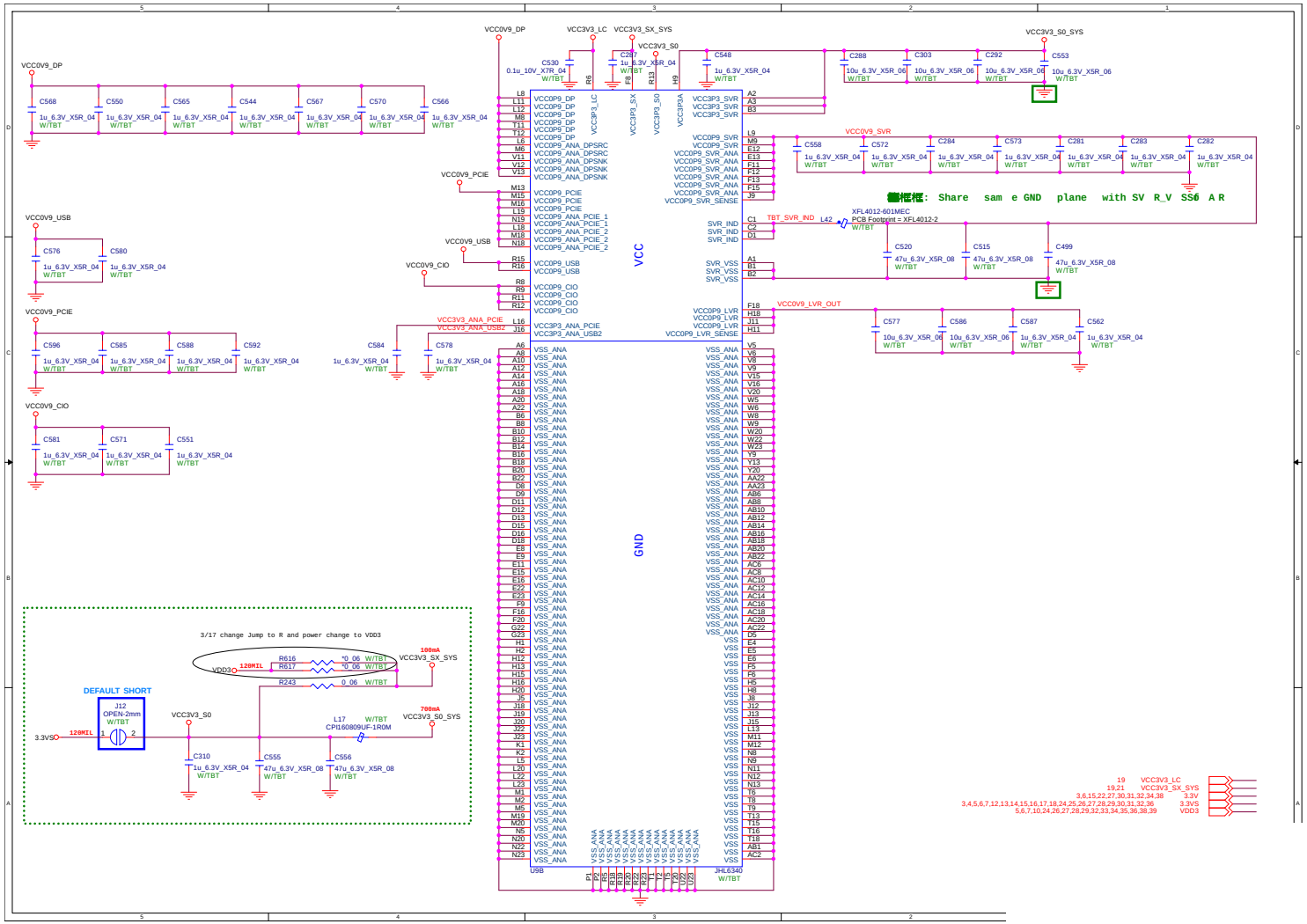


Sheet 20 of 45
AR_Power

# TPS65982



**Sheet 21 of 45**
**TPS65982**

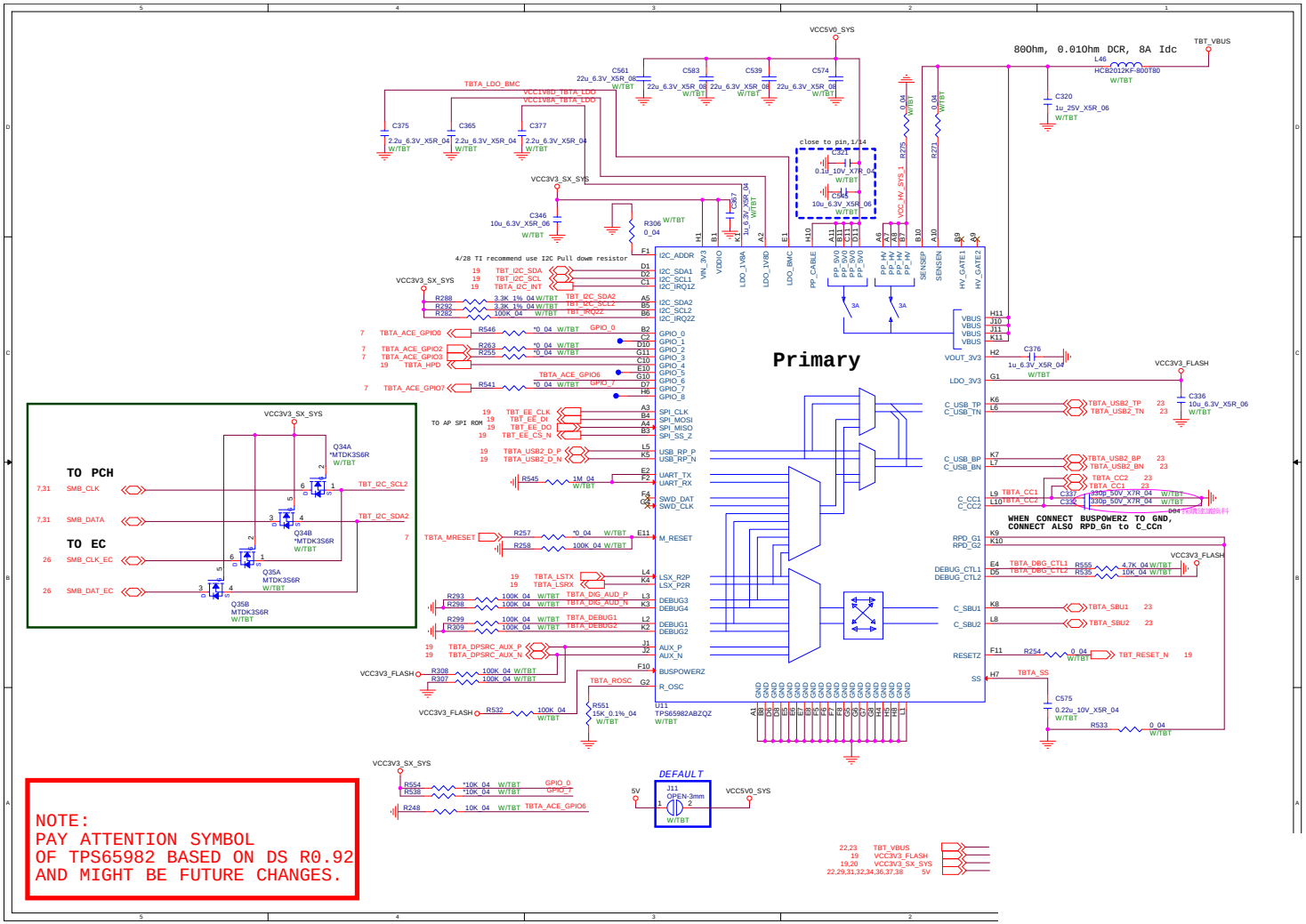

# ASM1543

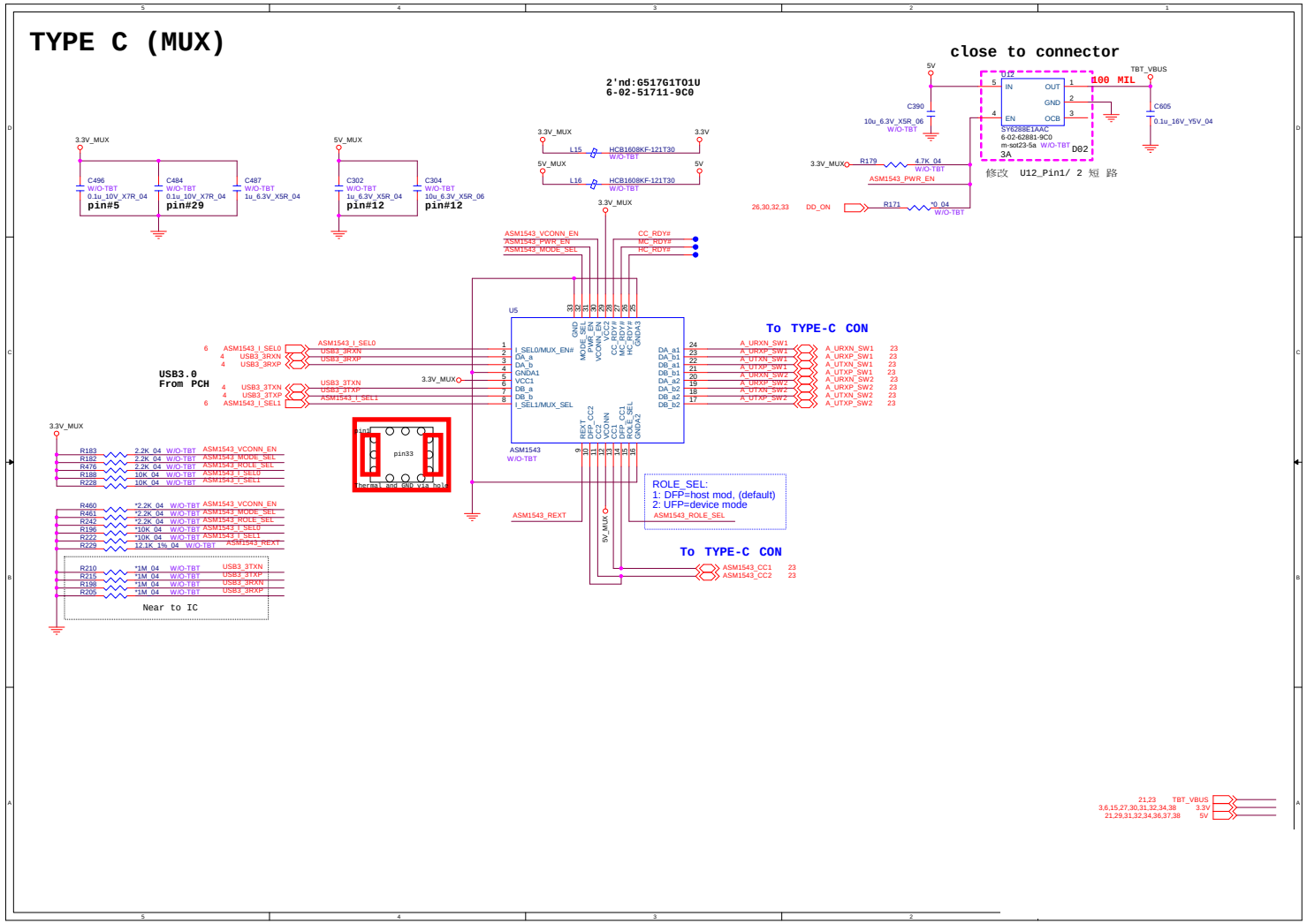


Sheet 22 of 45
ASM1543

# Type C



**Sheet 23 of 45**
**Type C**

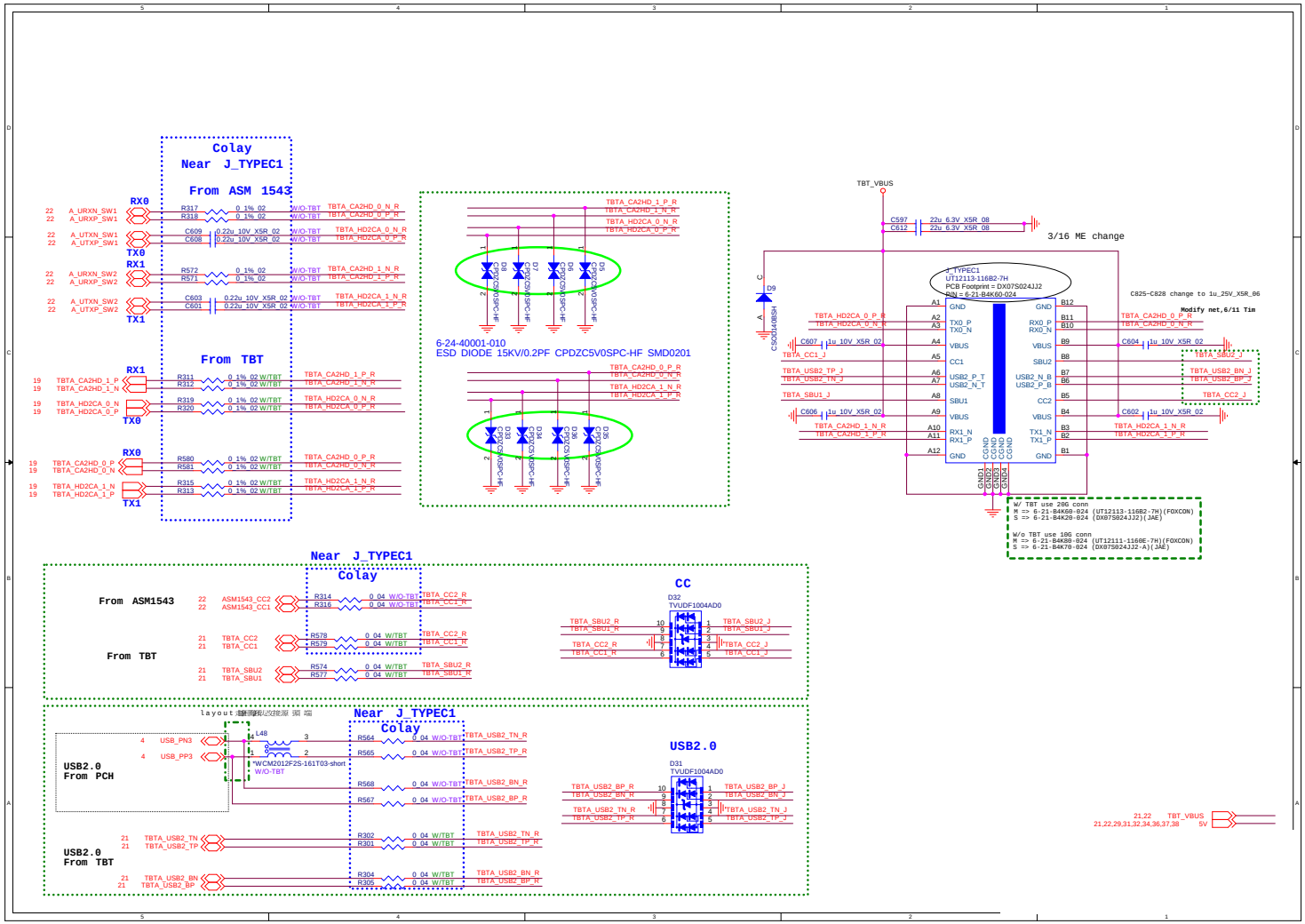

# Card Reader & LAN_RTL8411B

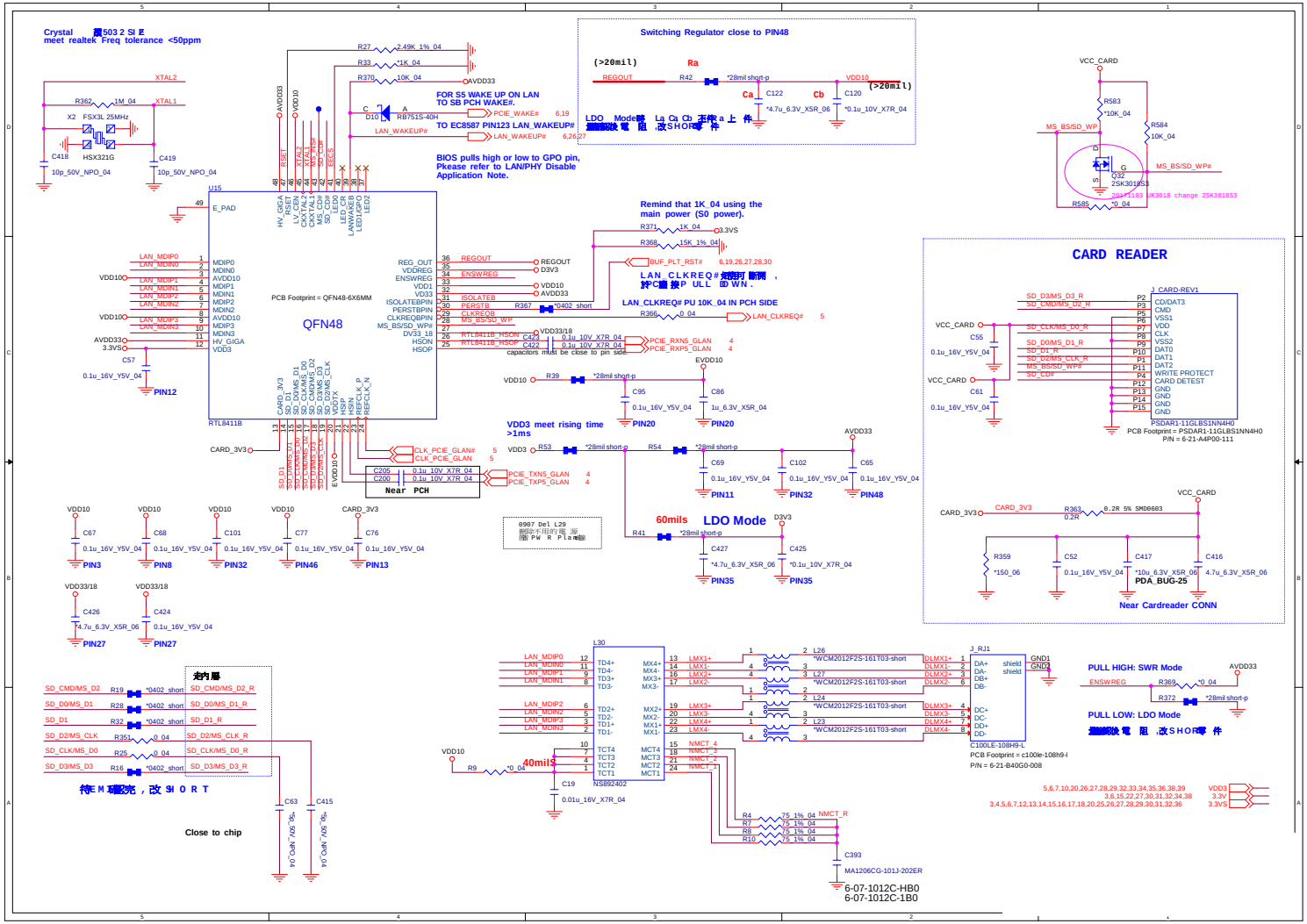


Sheet 24 of 45
Card Reader & LAN_RTL8411B

B.Schematic Diagrams

# Audio Codec



**Sheet 25 of 45**
**Audio Codec**

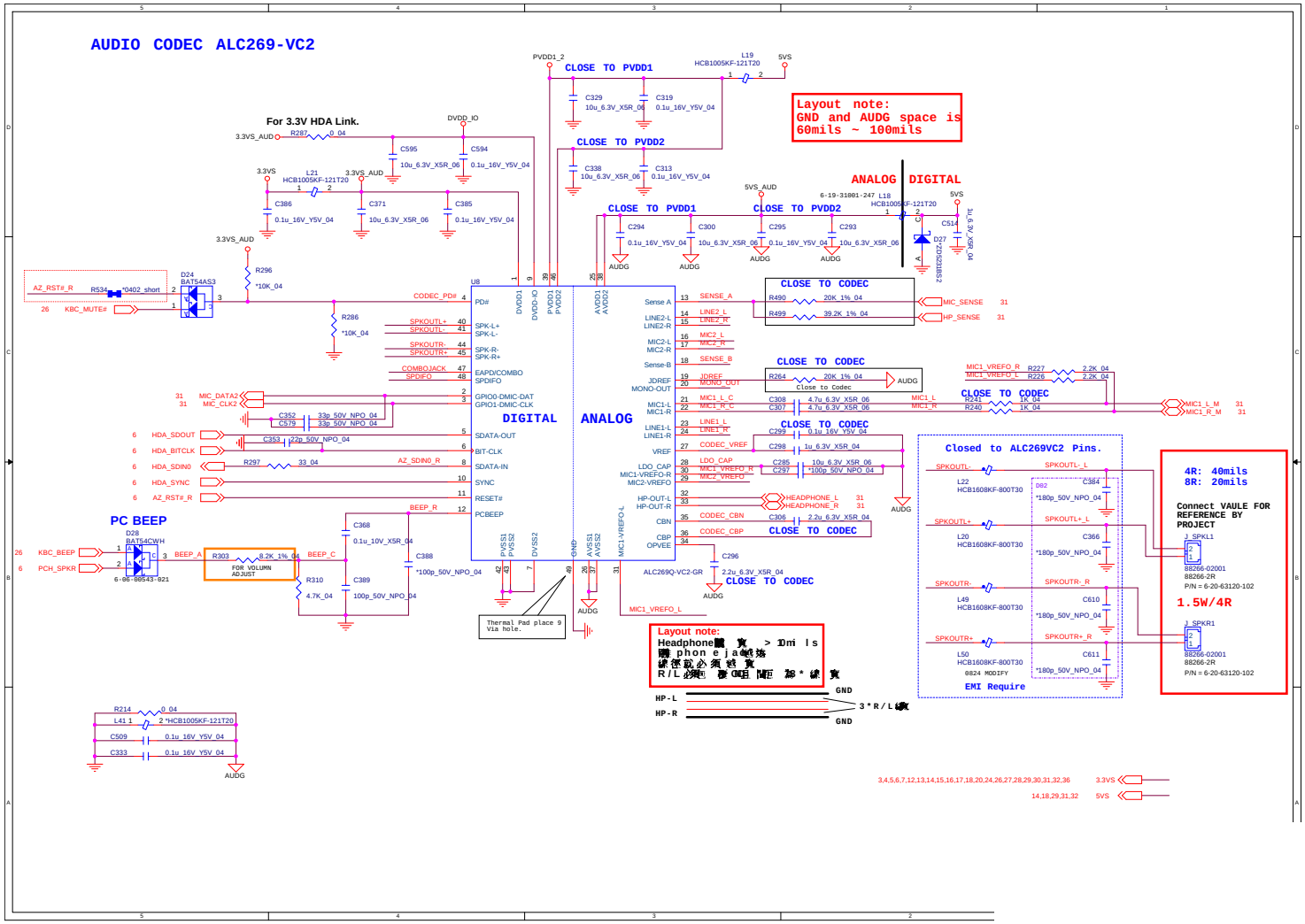

# KBC ITE IT8587

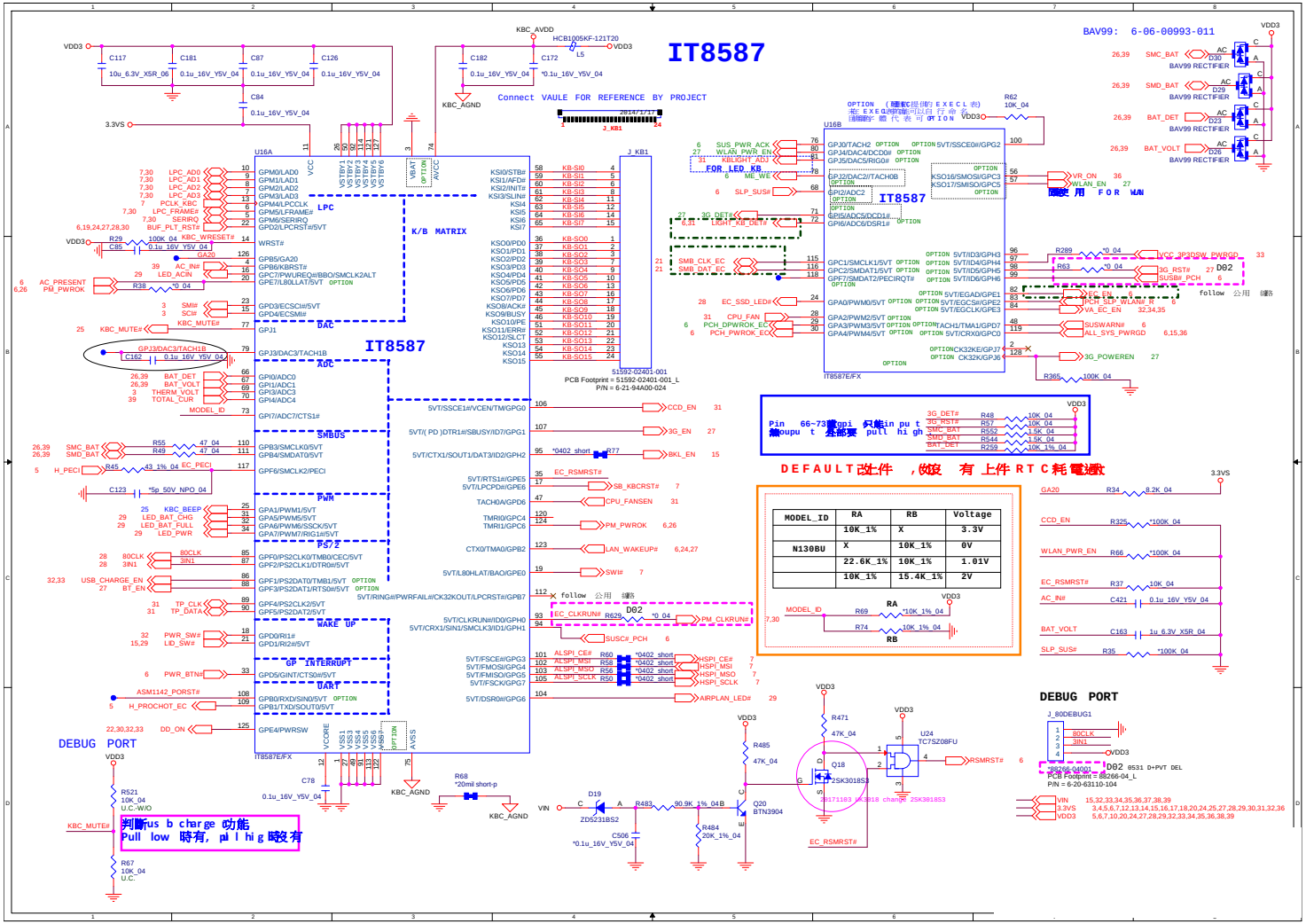


Sheet 26 of 45
KBC ITE IT8587

# WLAN/BT, 3G



**Sheet 27 of 45**
**WLAN/BT, 3G**

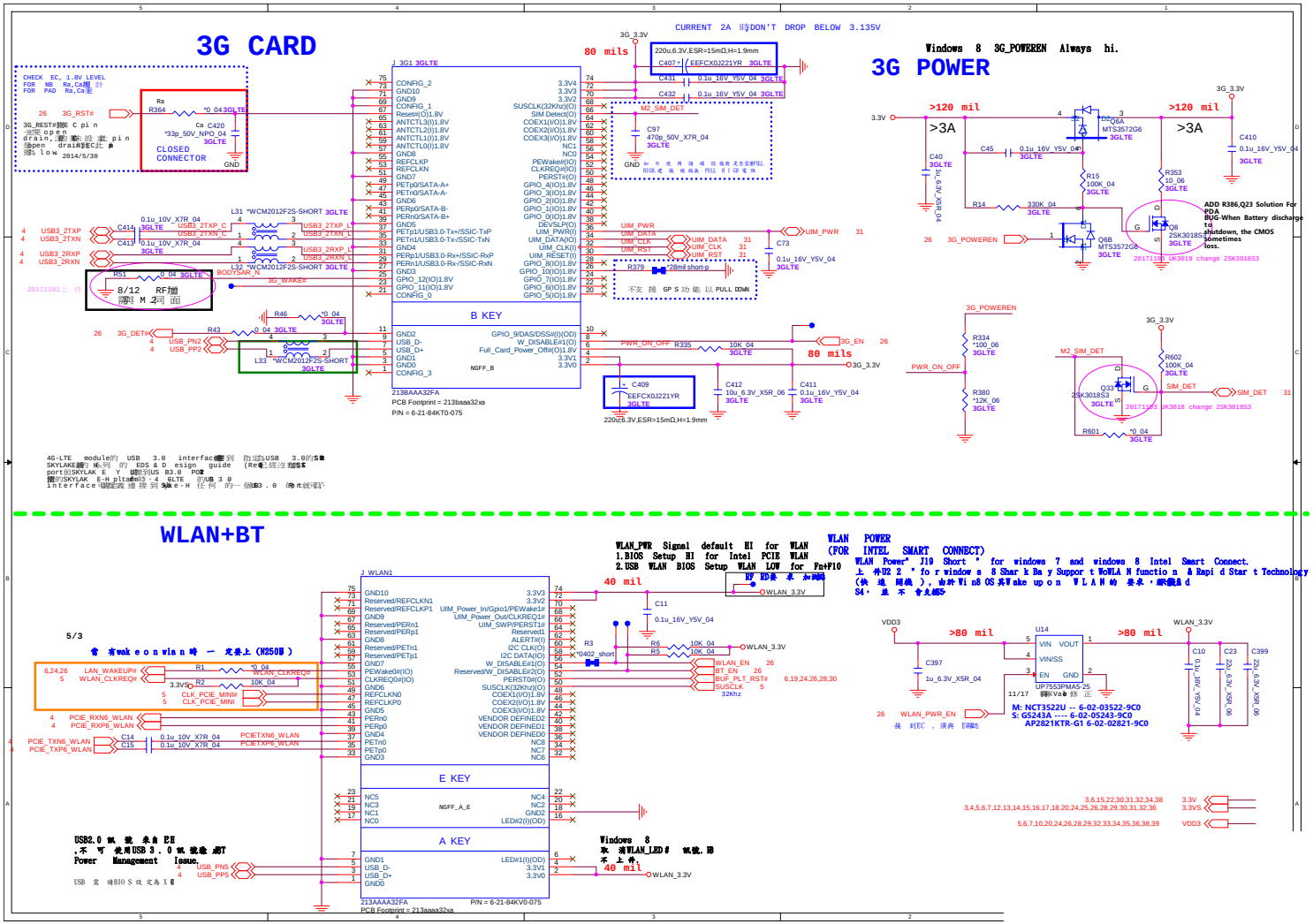

# M Key PCIE SSD

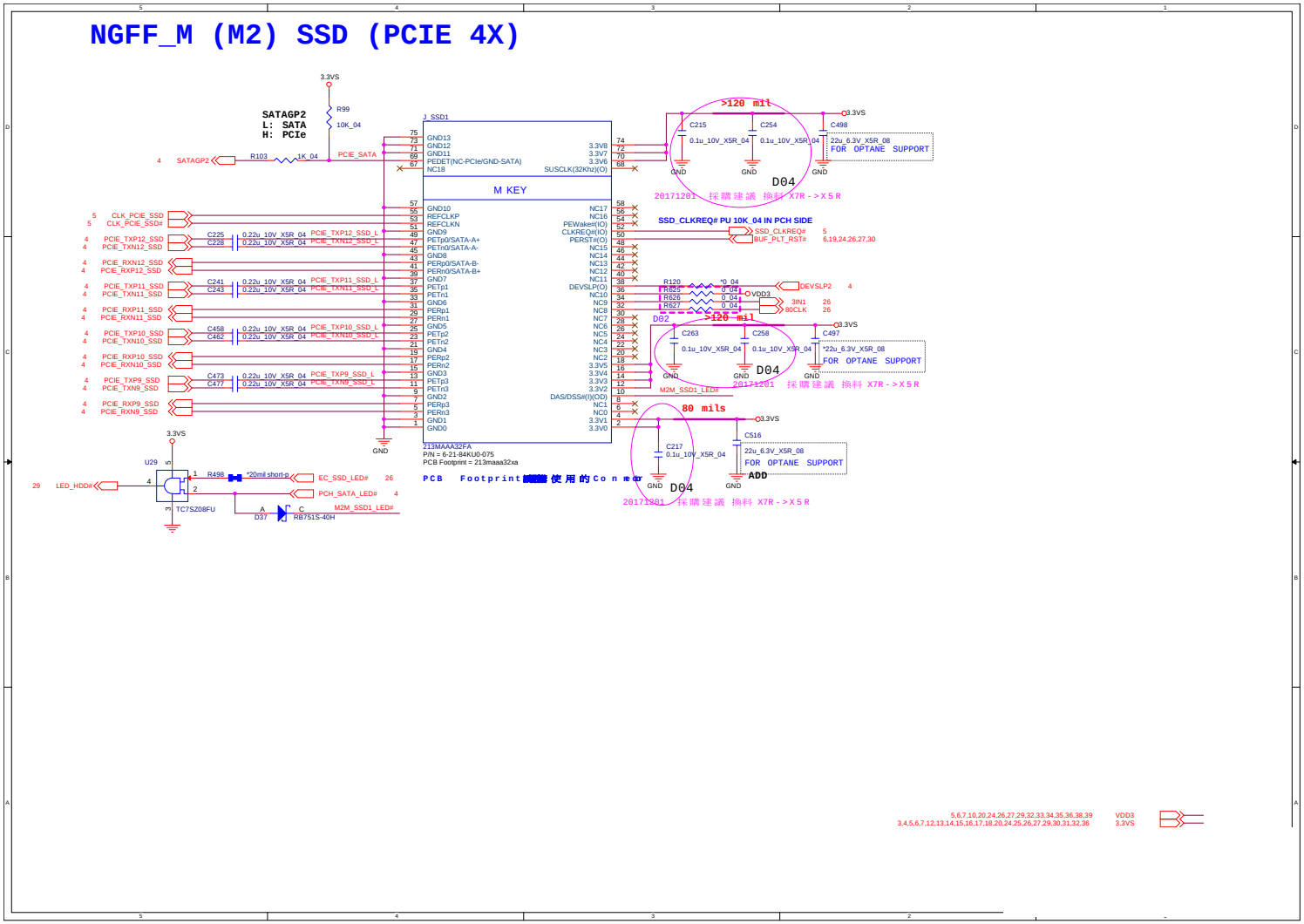


Sheet 28 of 45
M Key PCIE SSD

# SATA, LED, LID, SW



**Sheet 29 of 45**
**SATA, LED, LID, SW**

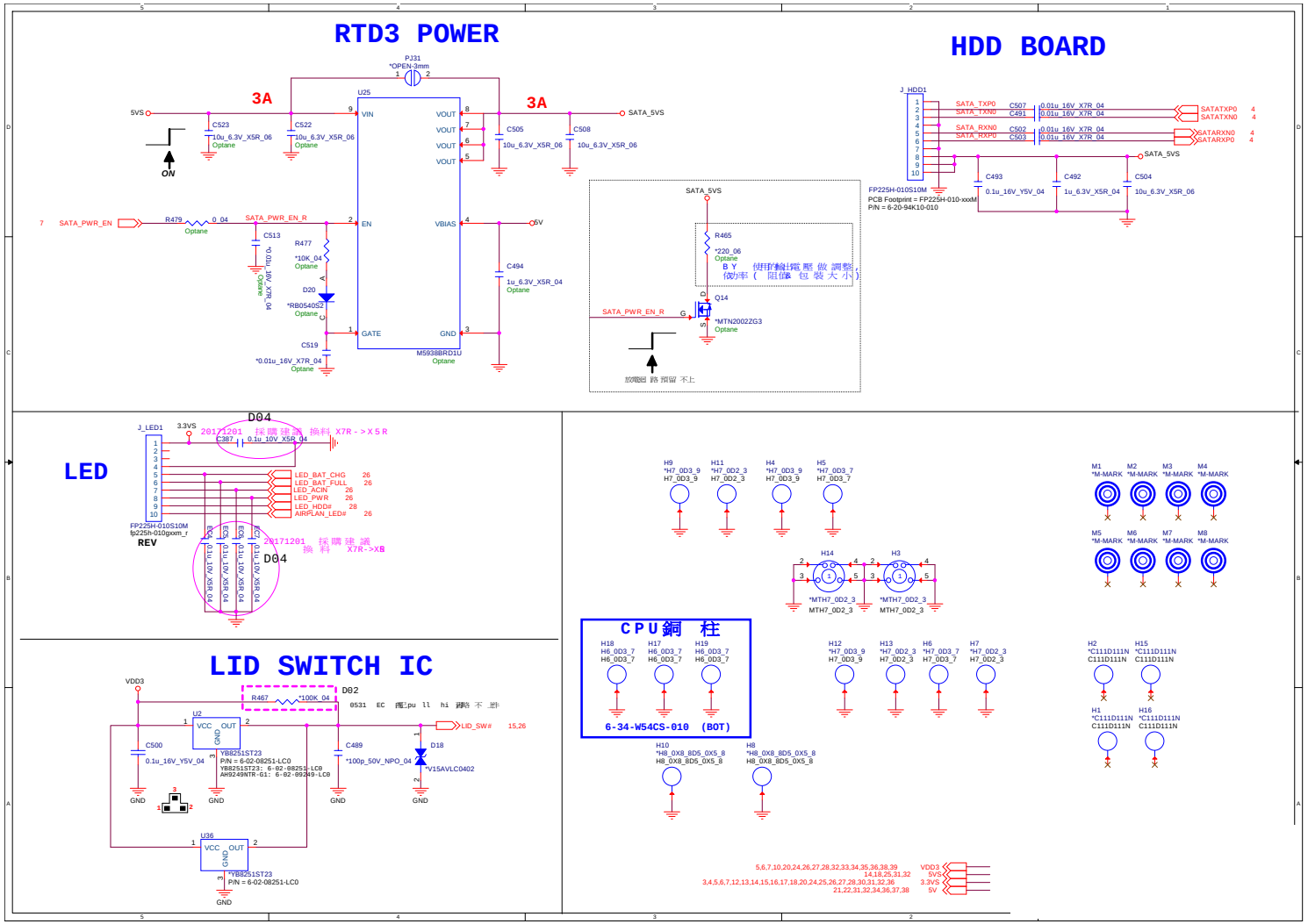

# USB Port / TPM

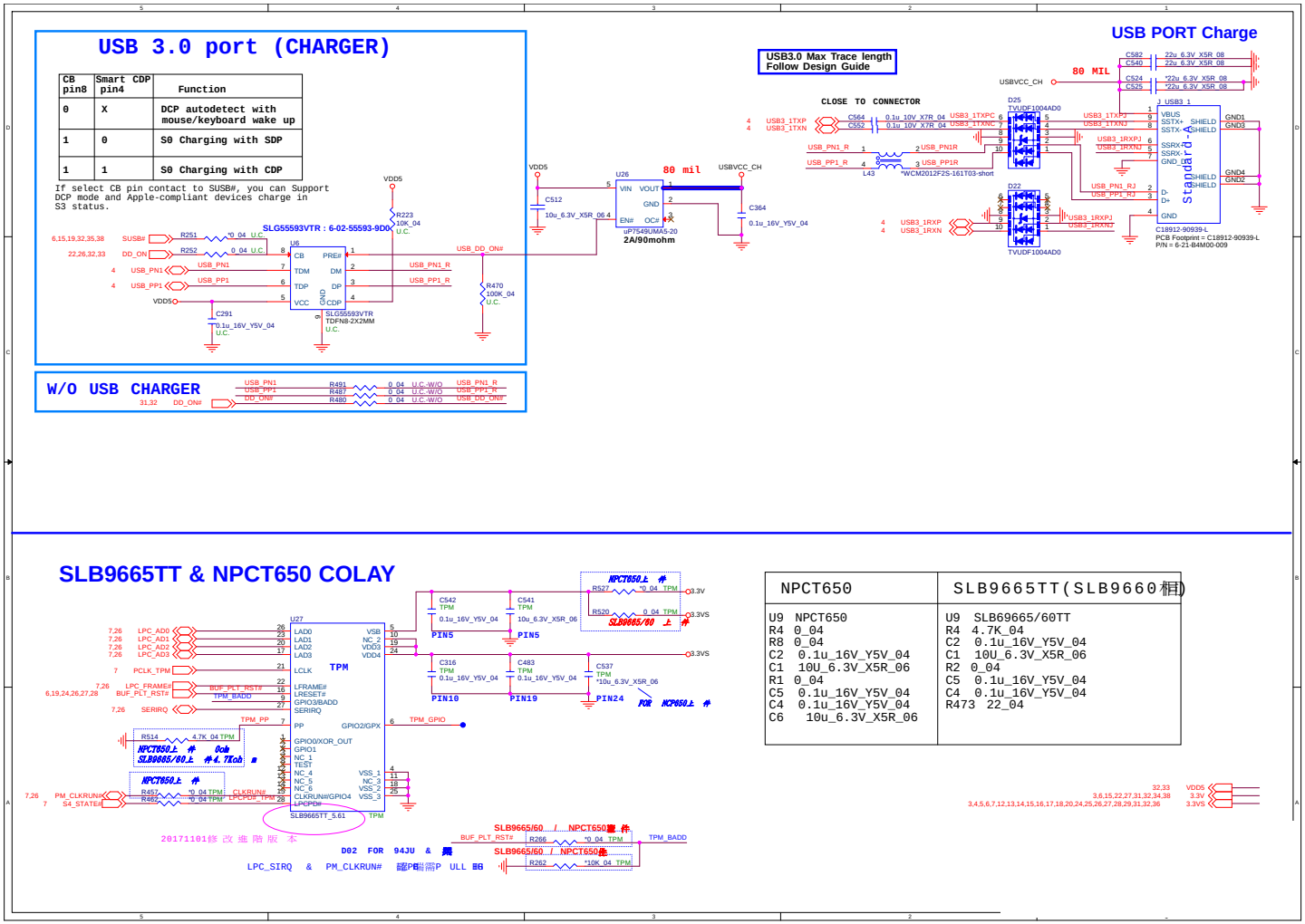


| NPCT650 | SLB9665TT(SLB9660相同) |
|---|---|
| U9 NPCT650<br>R4 0_04<br>R8 0_04<br>C2 0.1u_16V_Y5V_04<br>C1 10U_6.3V_X5R_06<br>R1 0_04<br>C5 0.1u_16V_Y5V_04<br>C4 0.1u_16V_Y5V_04<br>C6 10u_6.3V_X5R_06 | U9 SLB9665/60TT<br>R4 4.7K_04<br>C2 0.1u_16V_Y5V_04<br>C1 10U_6.3V_X5R_06<br>R2 0_04<br>C5 0.1u_16V_Y5V_04<br>C4 0.1u_16V_Y5V_04<br>R473 22_04 |

Sheet 30 of 45
USB Port / TPM

B.Schematic Diagrams

# Conn, CCD, Fan, TP, LED KB



**Sheet 31 of 45**
**Conn, CCD, Fan, TP, LED KB**

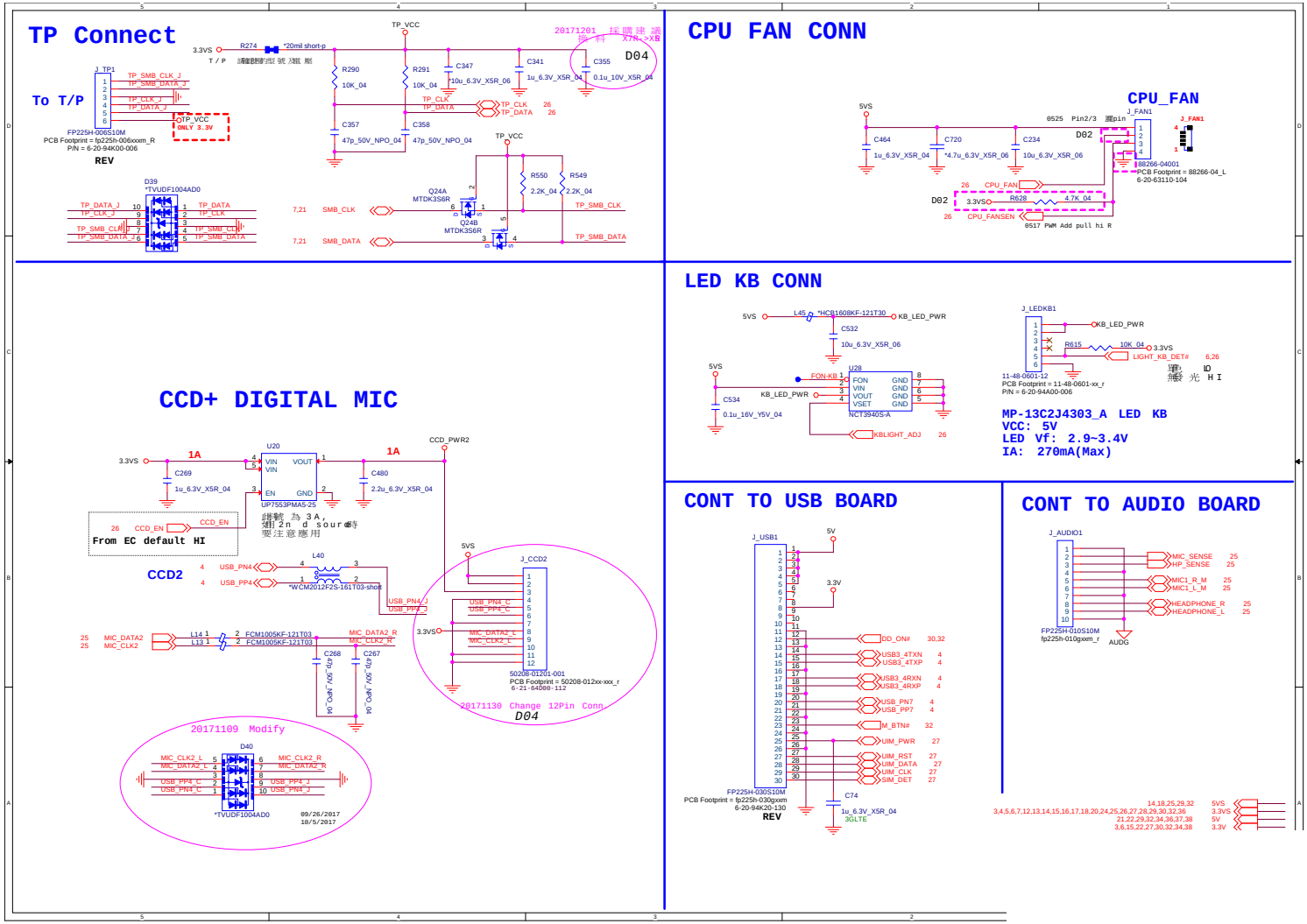

# 3V, 5V, 3VS, 5VS, 1.8VS CTL

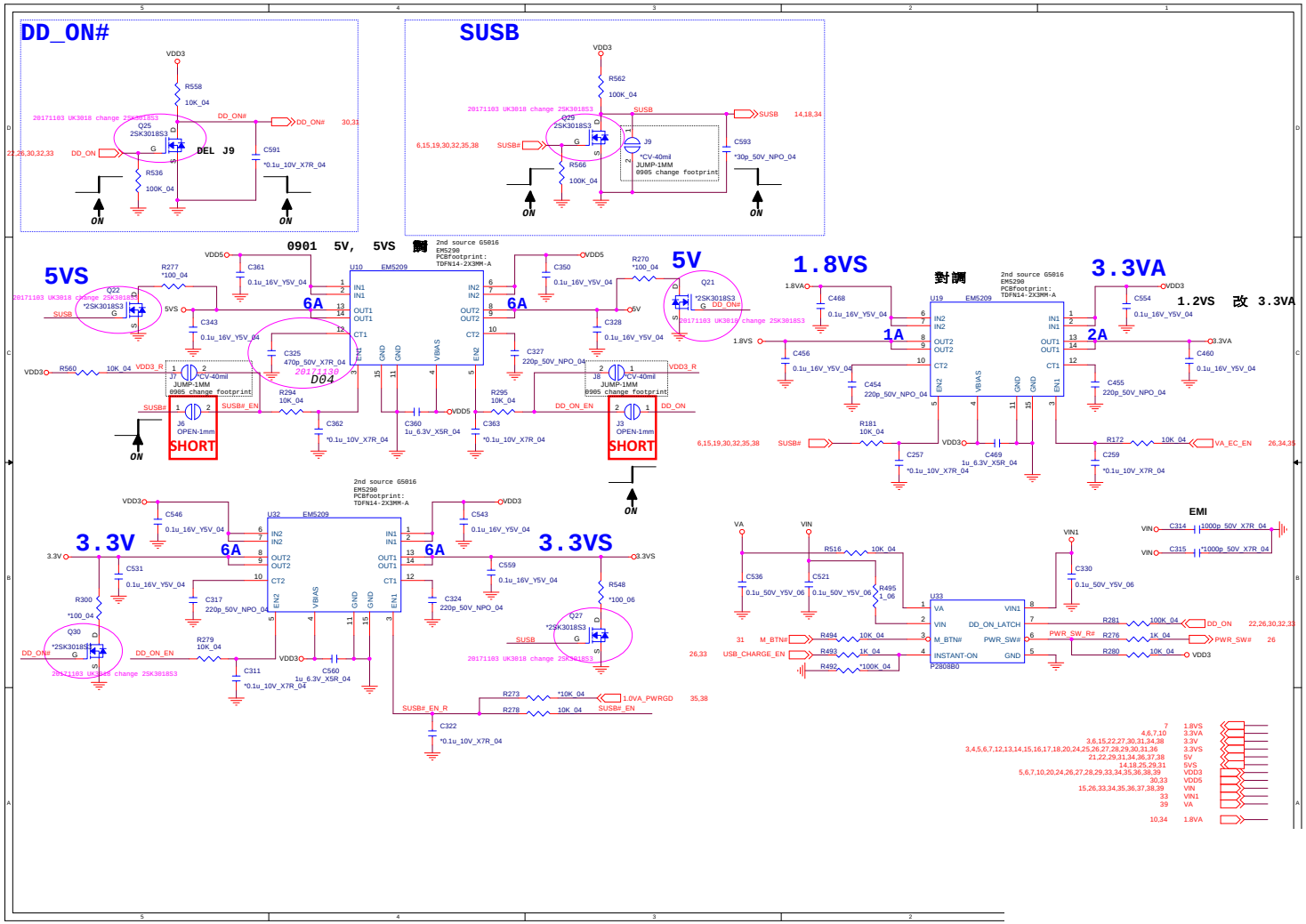


Sheet 32 of 45
3V, 5V, 3VS, 5VS, 1.8VS CTL

# VDD3, VDD5



**Sheet 33 of 45**
**VDD3, VDD5**

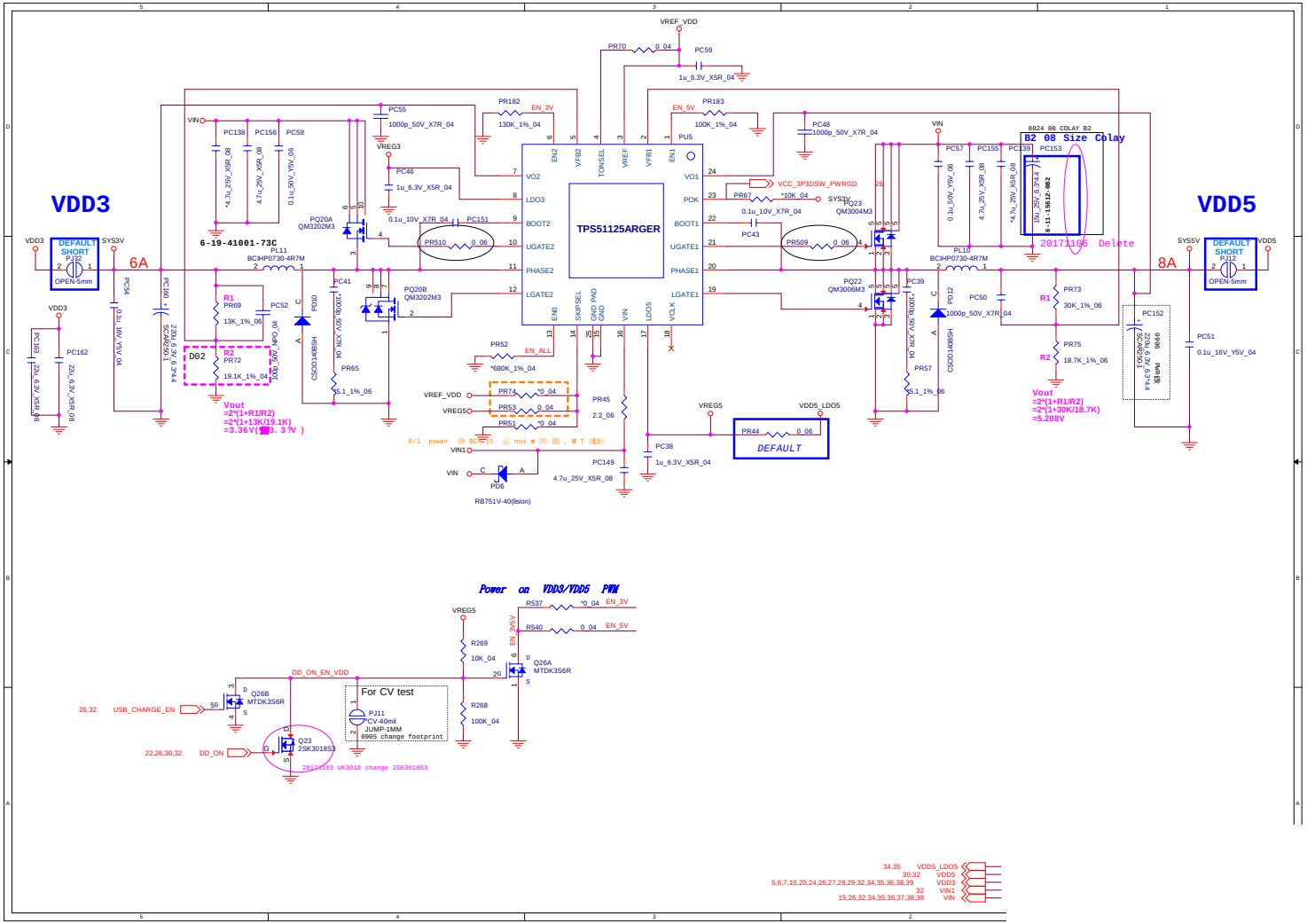

# VDDQ, VDDQ_VTT, 1.5VS, 1.8VA

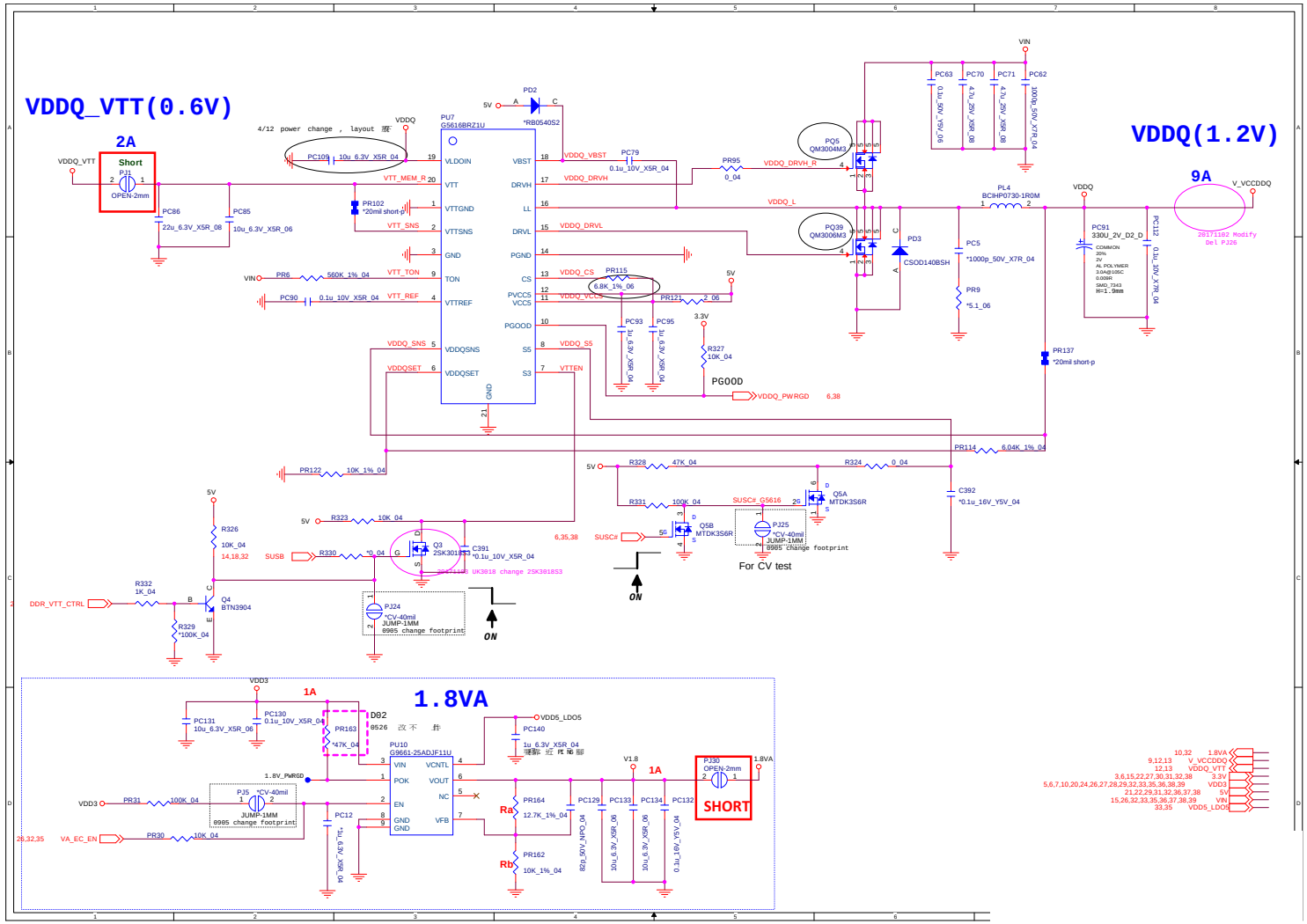


Sheet 34 of 45
VDDQ, VDDQ_VTT,
1.5VS, 1.8VA

# 1.0V Series



**Sheet 35 of 45**
**1.0V Series**

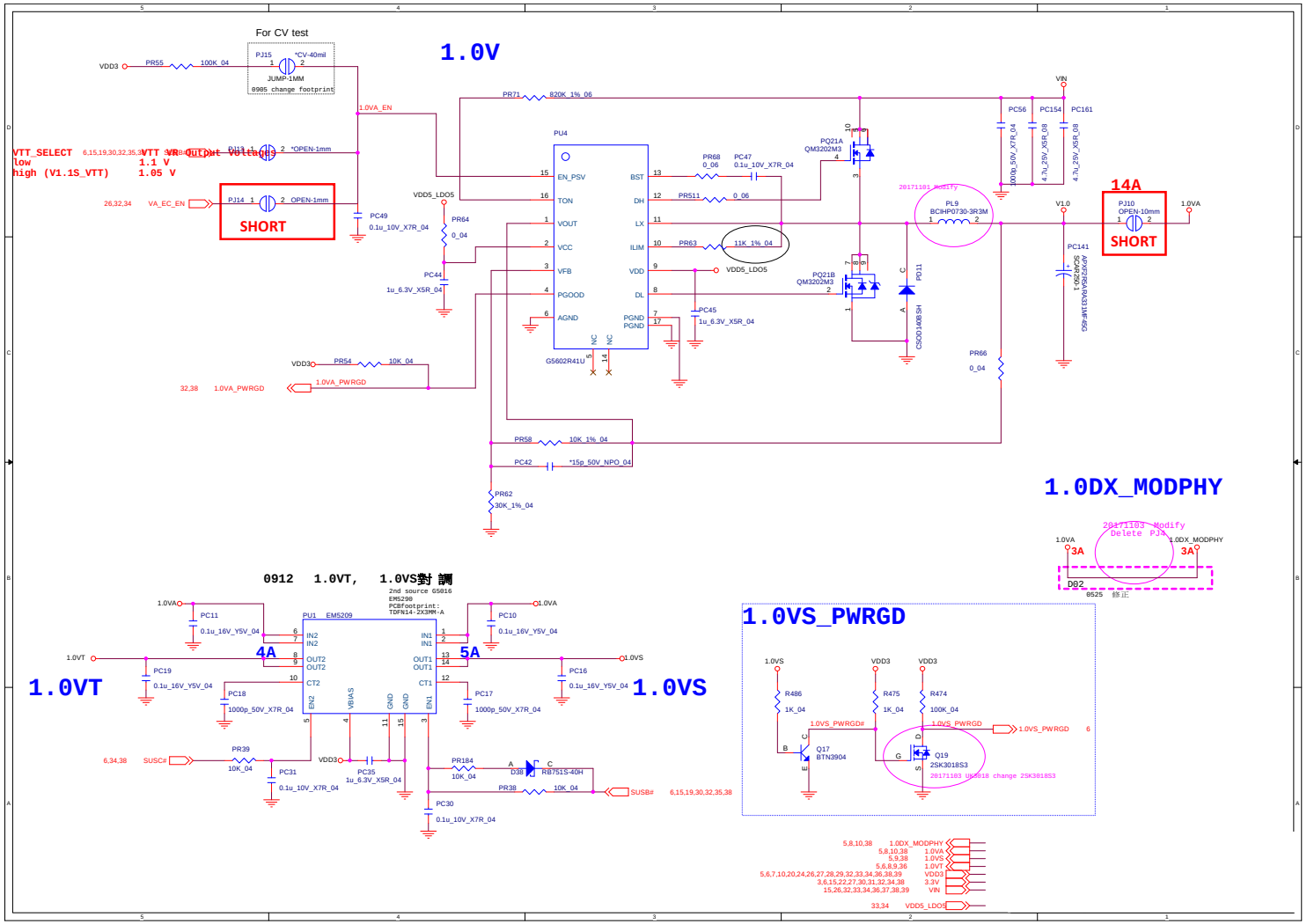

# RT3602AE

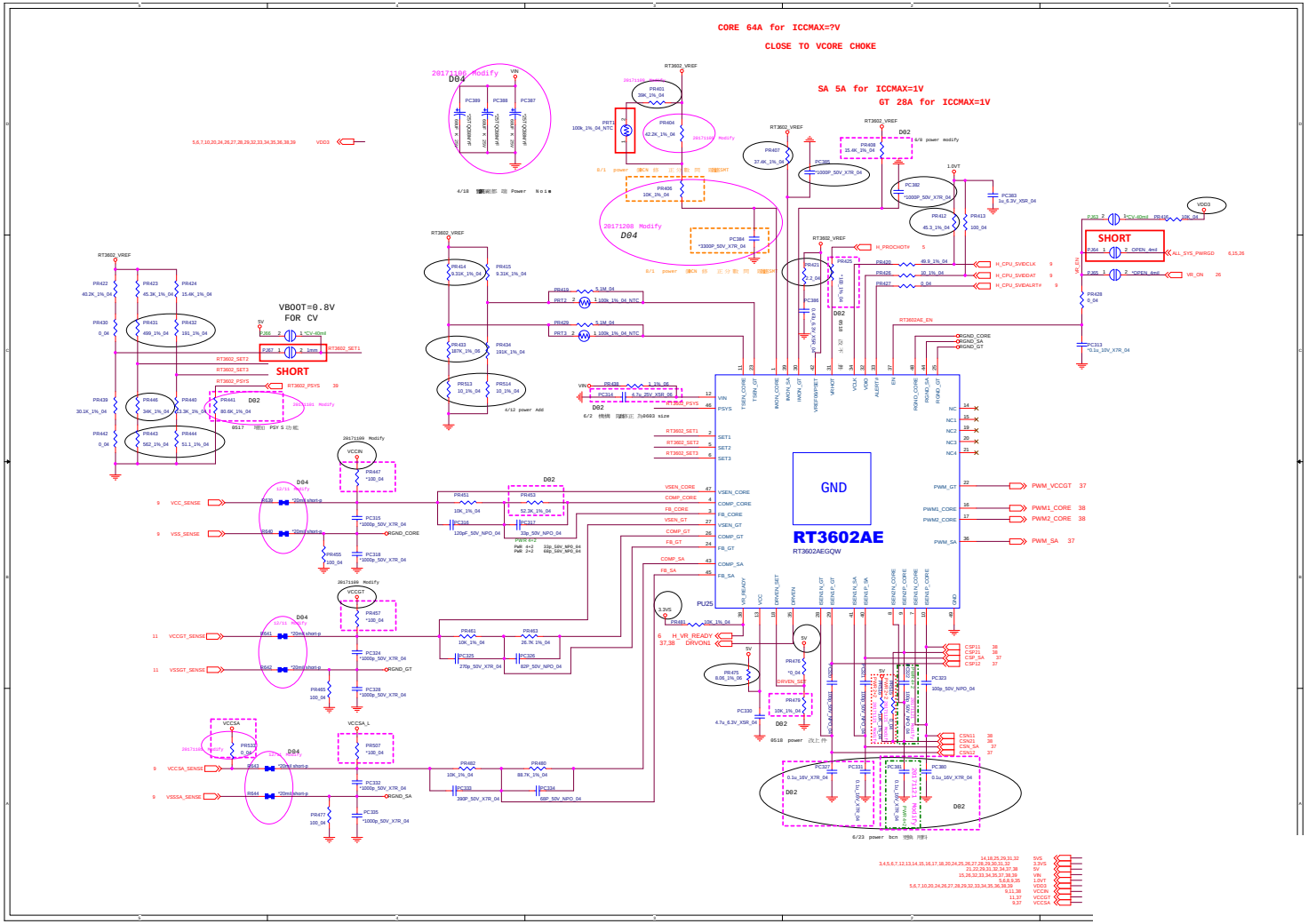


Sheet 36 of 45
RT3602AE

# VCC_In/Out, VCCGT, 2.5V



**Sheet 37 of 45**
**VCC In/Out, VCCGT, 2.5V**

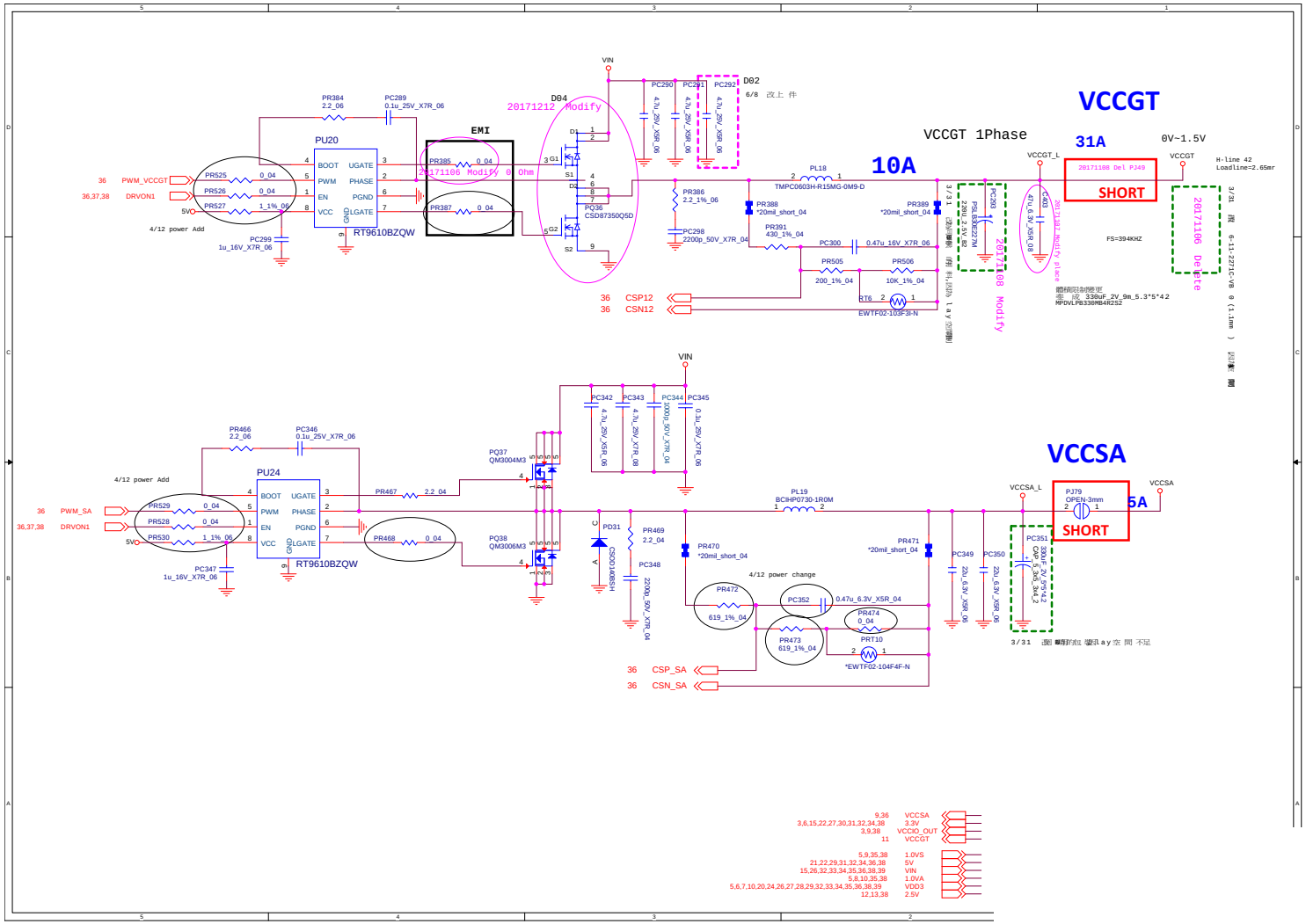

# VCCSA, 2.5V

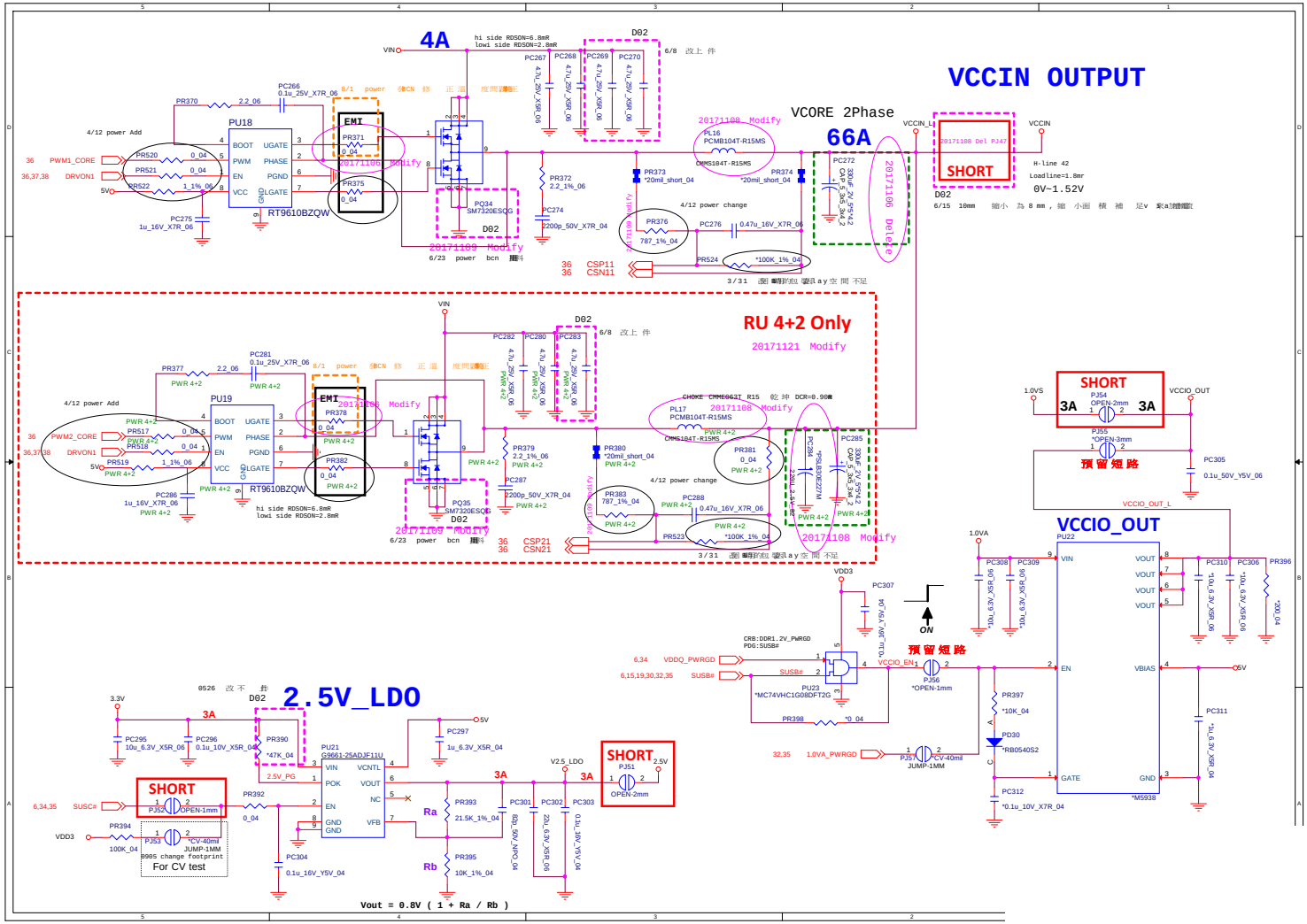


Sheet 38 of 45
VCCSA, 2.5V

B.Schematic Diagrams

# Charger, DC IN



**Sheet 39 of 45**
**Charger, DC IN**

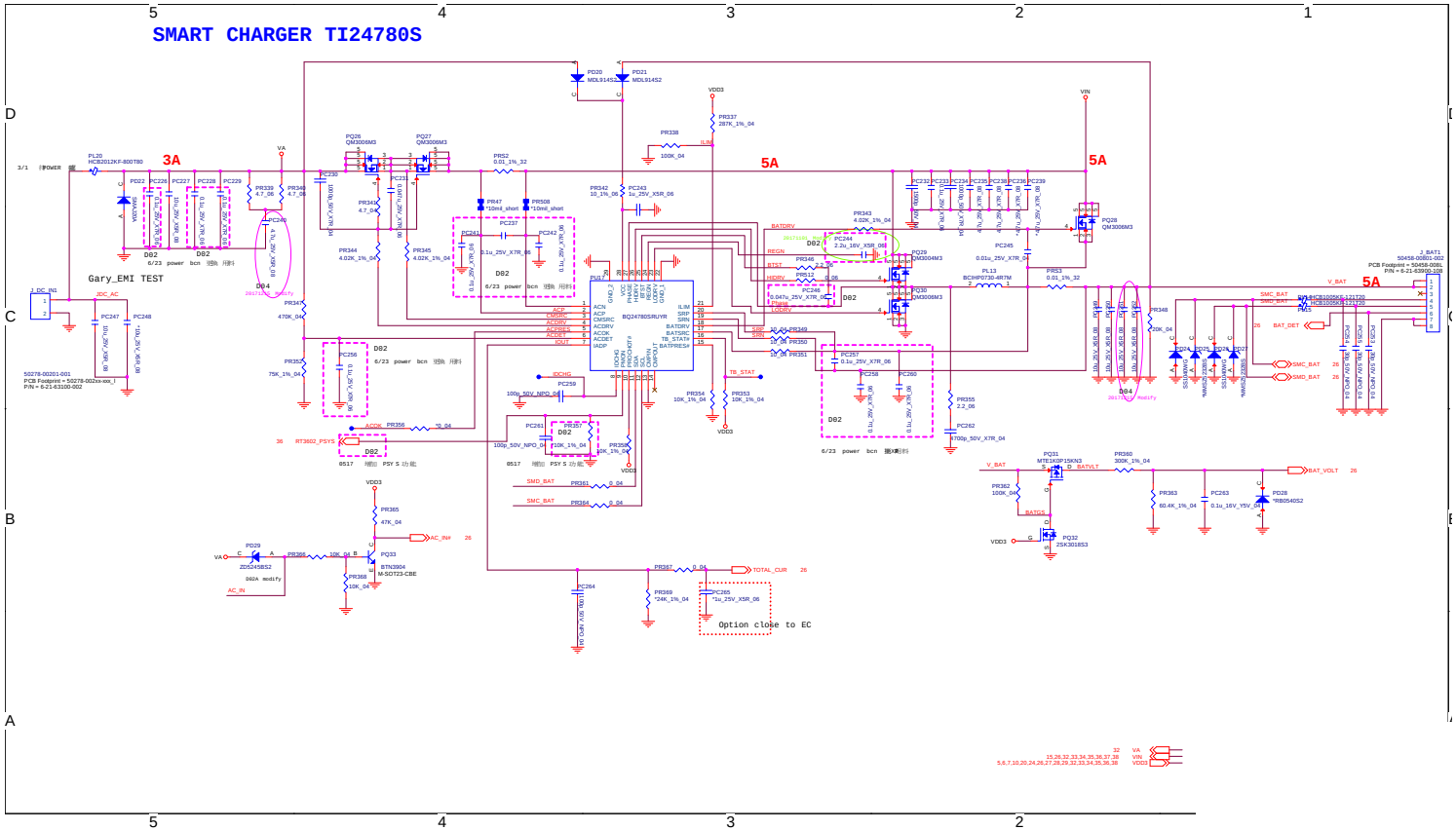

# USB Board

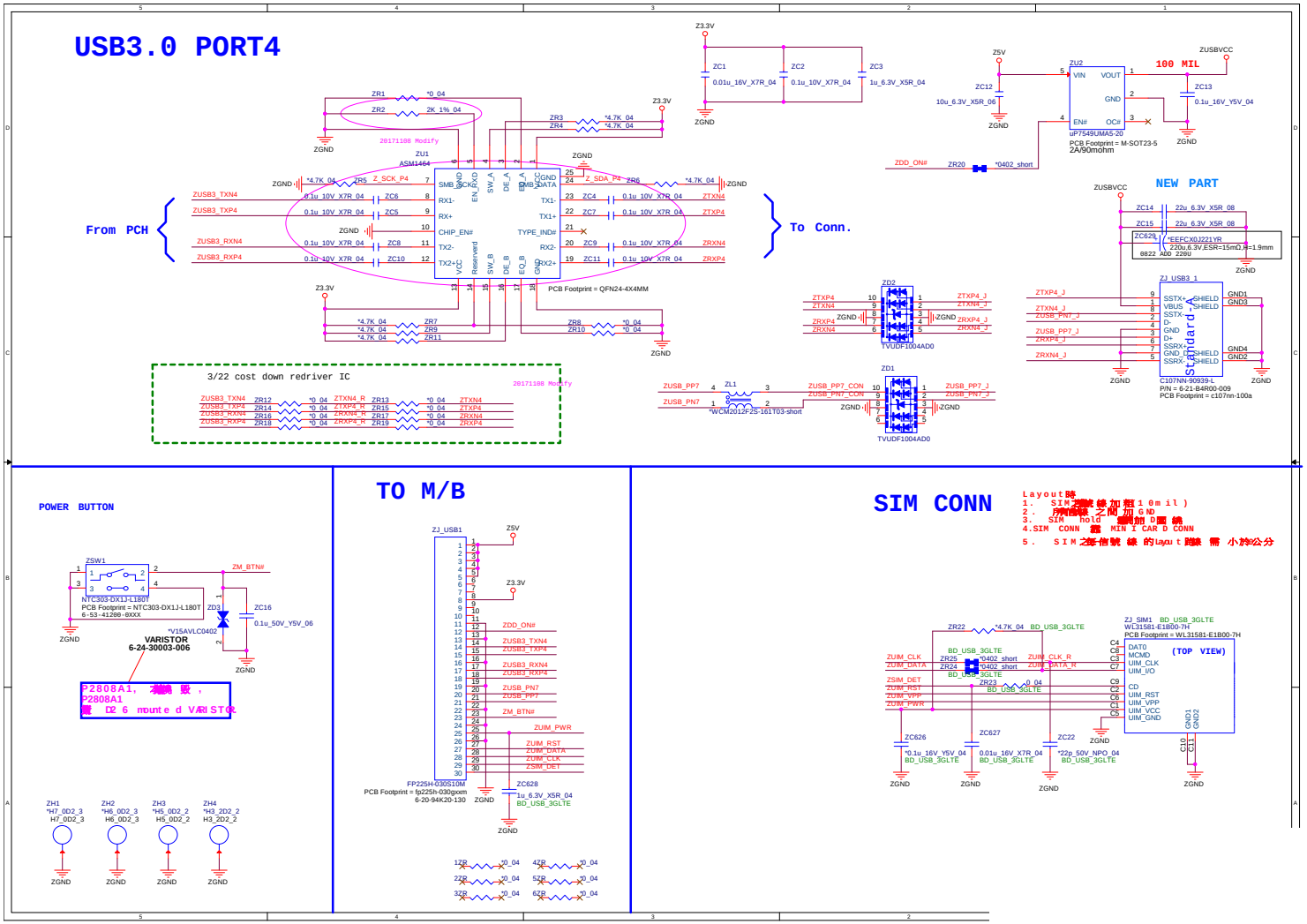


Sheet 40 of 45
USB Board

# Audio Board



**Sheet 41 of 45**
**Audio Board**

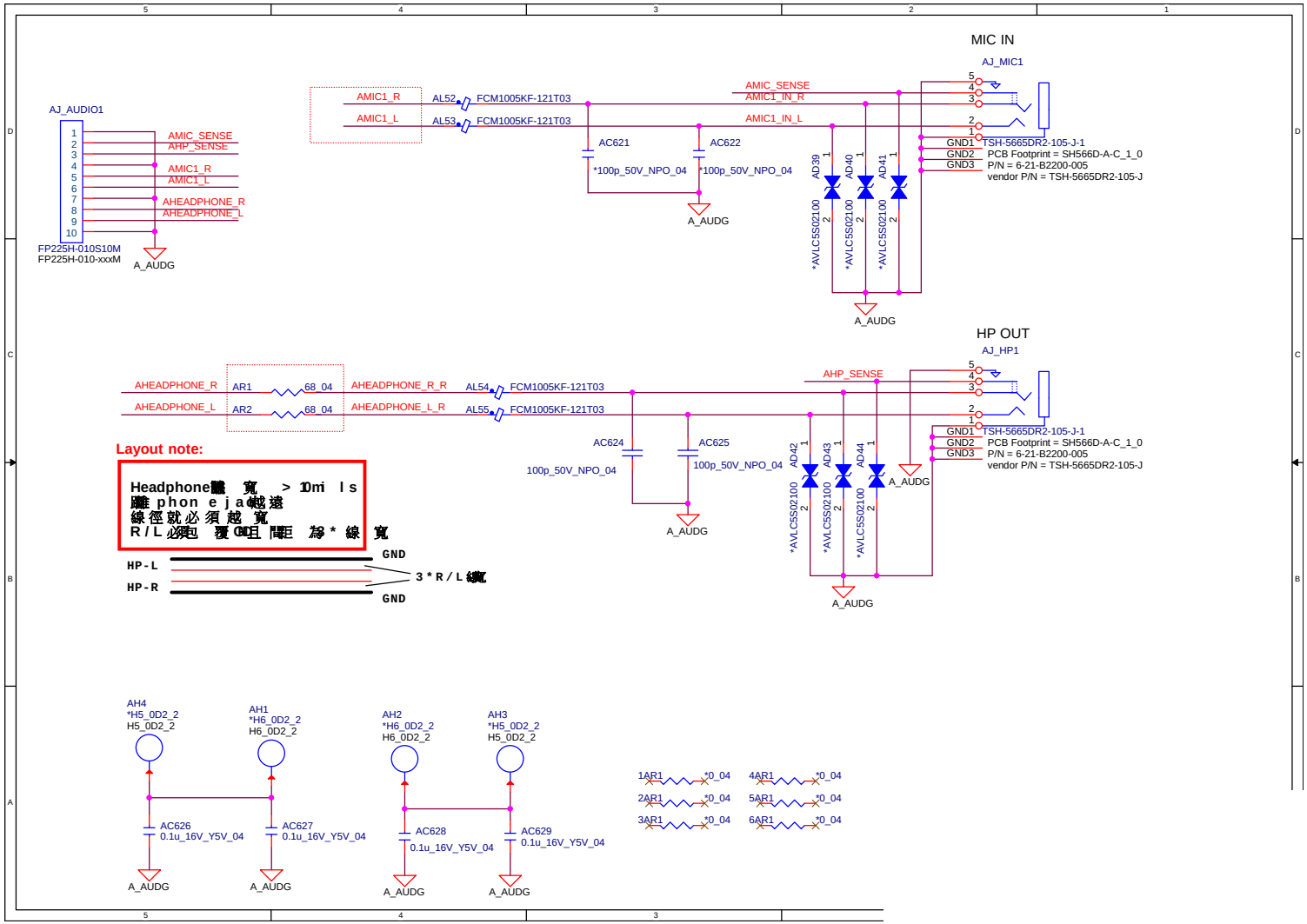

# Click Board

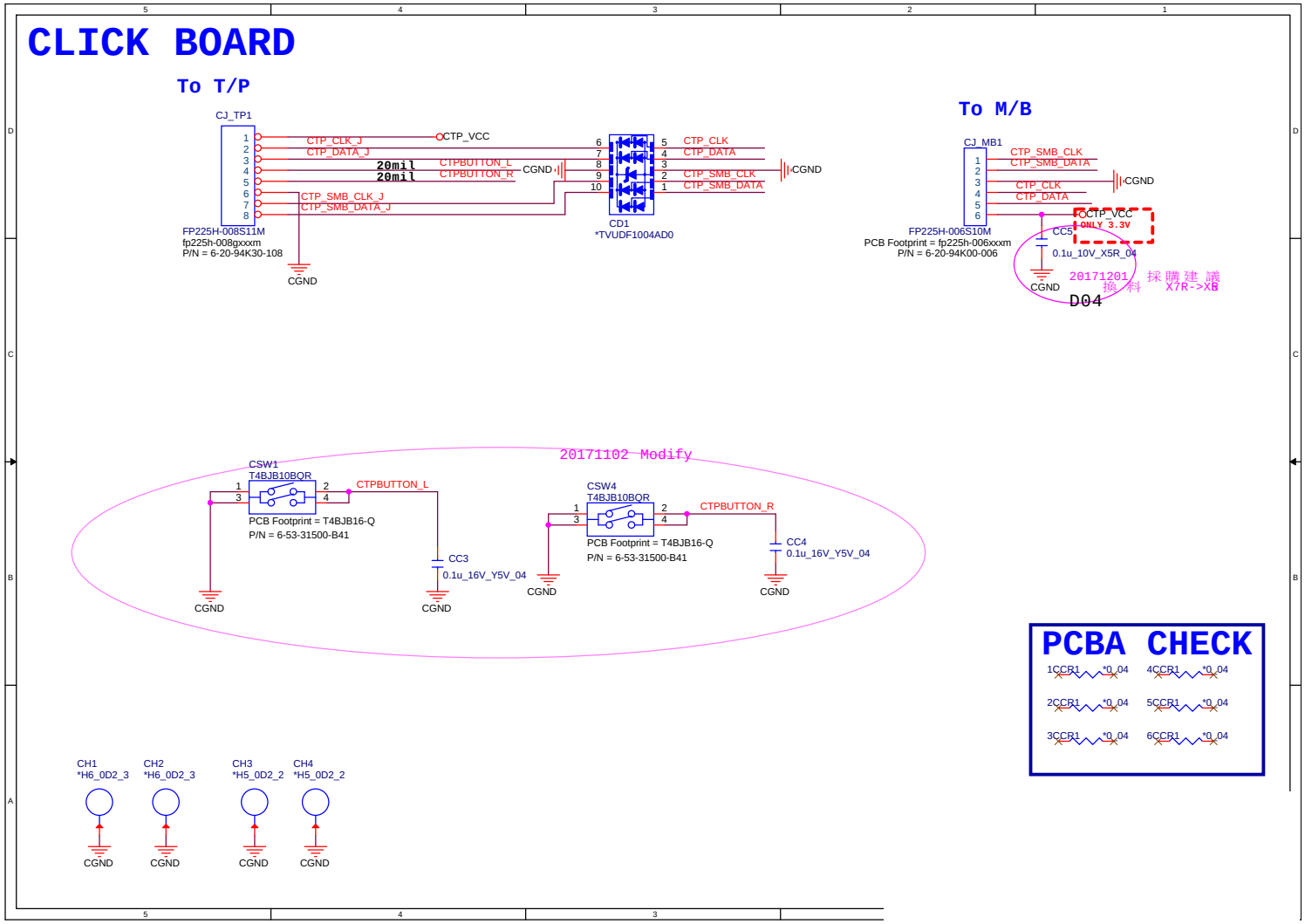


Sheet 42 of 45
Click Board

# LED Board



**Sheet 43 of 45**
**LED Board**

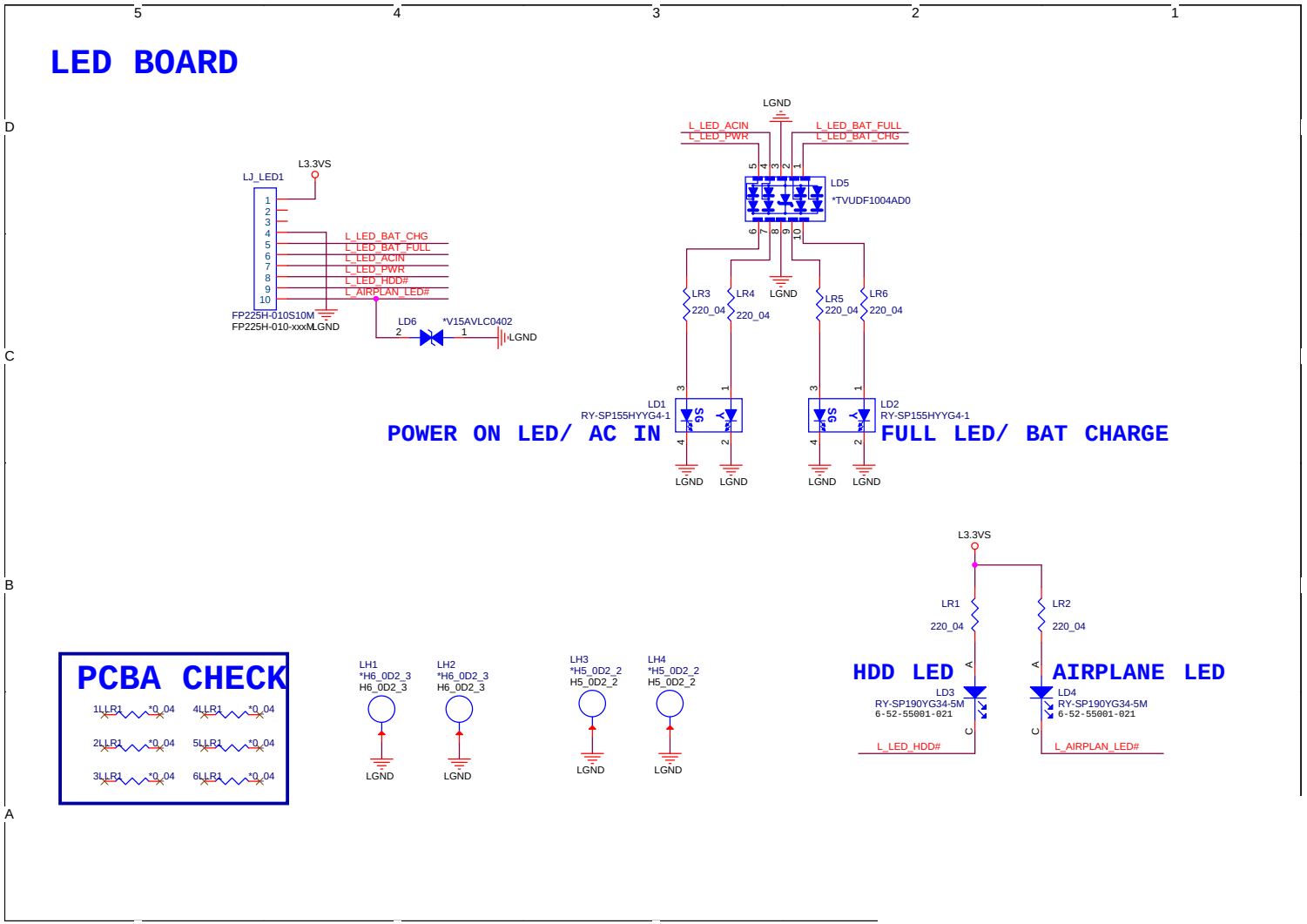

# DC Jack Board

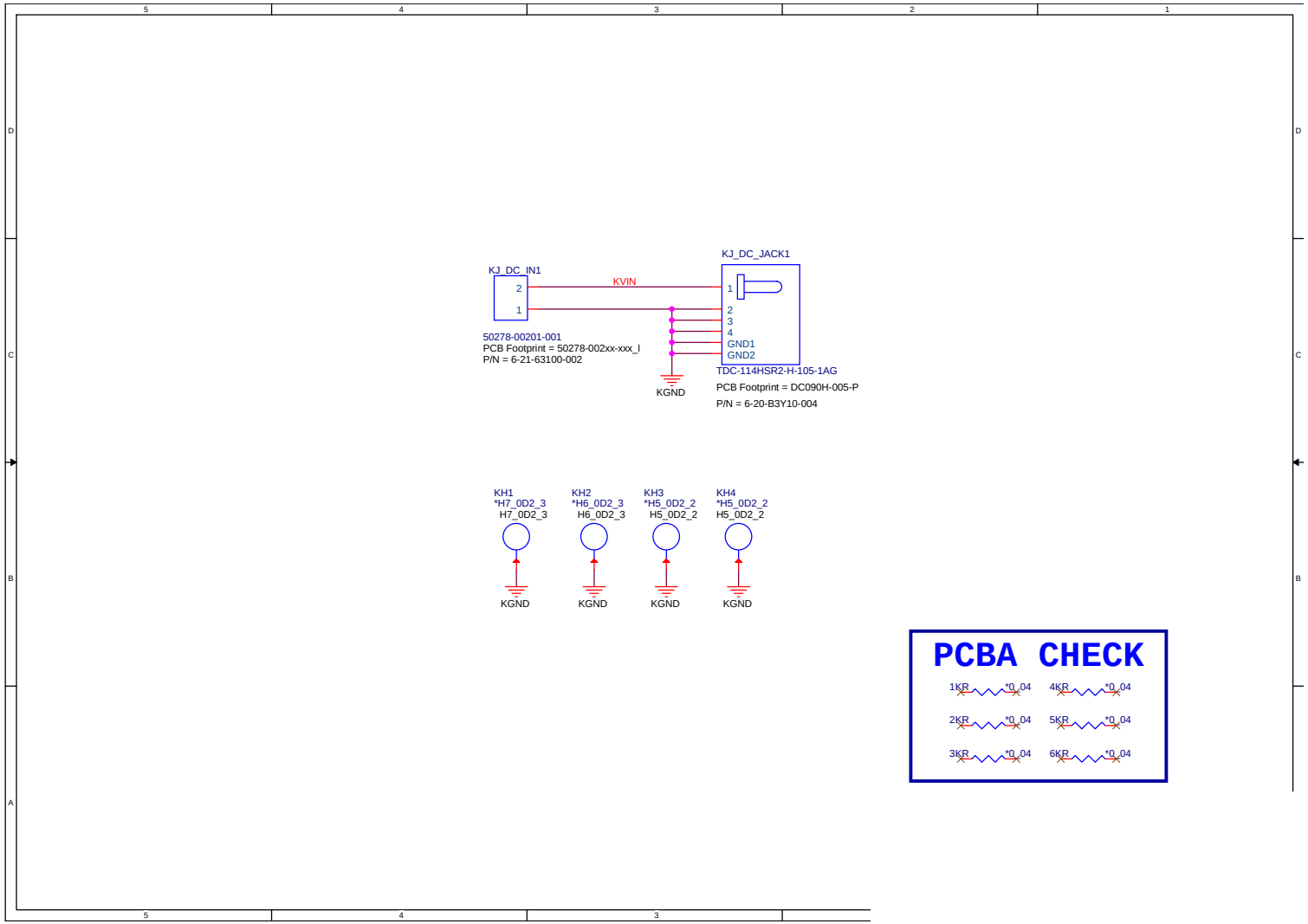


**Sheet 44 of 45**
**DC Jack Board**

# Appendix C:Updating the FLASH ROM BIOS

## To update the FLASH ROM BIOS, you must:

- Download the BIOS update from the web site.
- Unzip the files onto a bootable CD/DVD/USB Flash Drive.
- Reboot your computer from an external CD/DVD/USB Flash Drive.
- Use the flash tools to update the flash BIOS using the commands indicated below.
- Restart the computer booting from the HDD and press **F2** at startup enter the BIOS.
- Load setup defaults from the BIOS and save the default settings and exit the BIOS to restart the computer.
- After rebooting the computer you may restart the computer again and make any required changes to the default BIOS settings.

### Download the BIOS

1. Go to **www.clevo.com.tw** and point to **E-Services** and click **E-Channel**.
2. Use your user ID and password to access the appropriate download area (BIOS), and download the latest BIOS files (the BIOS file will be contained in a batch file that may be run directly once unzipped) for your computer model (**see sidebar for important information on BIOS versions**).

### Unzip the downloaded files to a bootable CD/DVD/ or USB Flash drive

1. Insert a bootable CD/DVD/USB flash drive into the CD/DVD drive/USB port of the computer containing the downloaded files.
2. Use a tool such as Winzip or Winrar to unzip all the BIOS files and refresh tools to your bootable CD/DVD/USB flash drive (you may need to create a bootable CD/DVD with the files using a 3rd party software).

### Set the computer to boot from the external drive

1. With the bootable CD/DVD/USB flash drive containing the BIOS files in your CD/DVD drive/USB port, restart the computer and press **F2** (in most cases) to enter the BIOS.
2. Use the arrow keys to highlight the **Boot** menu.
3. Use the "+" and "-" keys to move boot devices up and down the priority order.
4. Make sure that the CD/DVD drive/USB flash drive is set first in the boot priority of the BIOS.
5. Press **F4** to save any changes you have made and exit the BIOS to restart the computer.

**BIOS Version**

Make sure you download the latest correct version of the BIOS appropriate for the computer model you are working on.

**You should only download BIOS versions that are V1.0X.XX or higher** as appropriate for your computer model.

Note that BIOS versions are not backward compatible and therefore **you may not downgrade your BIOS to an older version** after upgrading to a later version (e.g if you upgrade a BIOS to ver 1.0X.05, you **MAY NOT** then go back and flash the BIOS to ver 1.0X.04).

## Use the flash tools to update the BIOS

1. Make sure you are not loading any memory management programs such as HIMEM by holding the **F8** key as you see the message "**EFI Shell**". You will then be prompted to give "**Y**" or "**N**" responses to the programs being loaded by EFI Shell. Choose "N" for any memory management programs.
2. You should now see DISK **fsX**:\> (X is the designated drive number for the CD/DVD drive/USB flash drive).
3. **Type the following command**:

   **fsX:\> Flash.nsh**

4. The utility will then proceed to flash the BIOS.
5. You should then be prompted to press any key to restart the system or turn the power off, and then on again but make sure you remove the CD/DVD/USB flash drive from the CD/DVD drive/USB port before the computer restarts.

## Restart the computer (booting from the HDD)

1. With the CD/DVD/USB flash drive removed from the CD/DVD drive/USB port the computer should restart from the HDD.
2. Press **F2** as the computer restarts to enter the BIOS.
3. Use the arrow keys to highlight the **Exit** menu.
4. Select **Load Setup Defaults** (or press **F3**) and select "**Yes**" to confirm the selection.
5. Press **F4** to save any changes you have made and exit the BIOS to restart the computer.

## Your computer is now running normally with the updated BIOS

You may now enter the BIOS and make any changes you require to the default settings.